ENGINEERING TOMORROW

VTT Rotor: Back EMF Test Fixture Final Presentation

Team #4:

Russell Hamerski

Thomas Razabdouski

Tim Romano

Andre Steimer

Andrew Panek

Advisor: Dr. Louis Cattafesta

Sponsor: Danfoss Turbocor – Brandon Pritchard

Instructors: Dr. Chiang Shih, Dr. Nikhil Gupta

Date: 4/16/2015

TURBOCOR®

Presentation Outline

ENGINEERING TOMORROW

- Background and Motivation
- Design Constraints
- Project Methodology
- Final Prototype (animated)
- Design Components and Specifications
- Testing
- Budget and Resource Allocation
- Conclusion/Future Work

Background

- Danfoss Turbocor is world leader in the oil-free centrifugal compressor category
- Compressors utilize magnetic shafts that levitate during rotation

VTT Compressor

- Launching new, larger compressor in 2015:
  - VTT Compressor
- Will utilize larger rotors manufactured by third party

Motivation

- Need test fixture to qualify rotors
- Will measure back electromotive force (EMF)
- Test fixture for smaller rotors already developed
- Several constraints on design

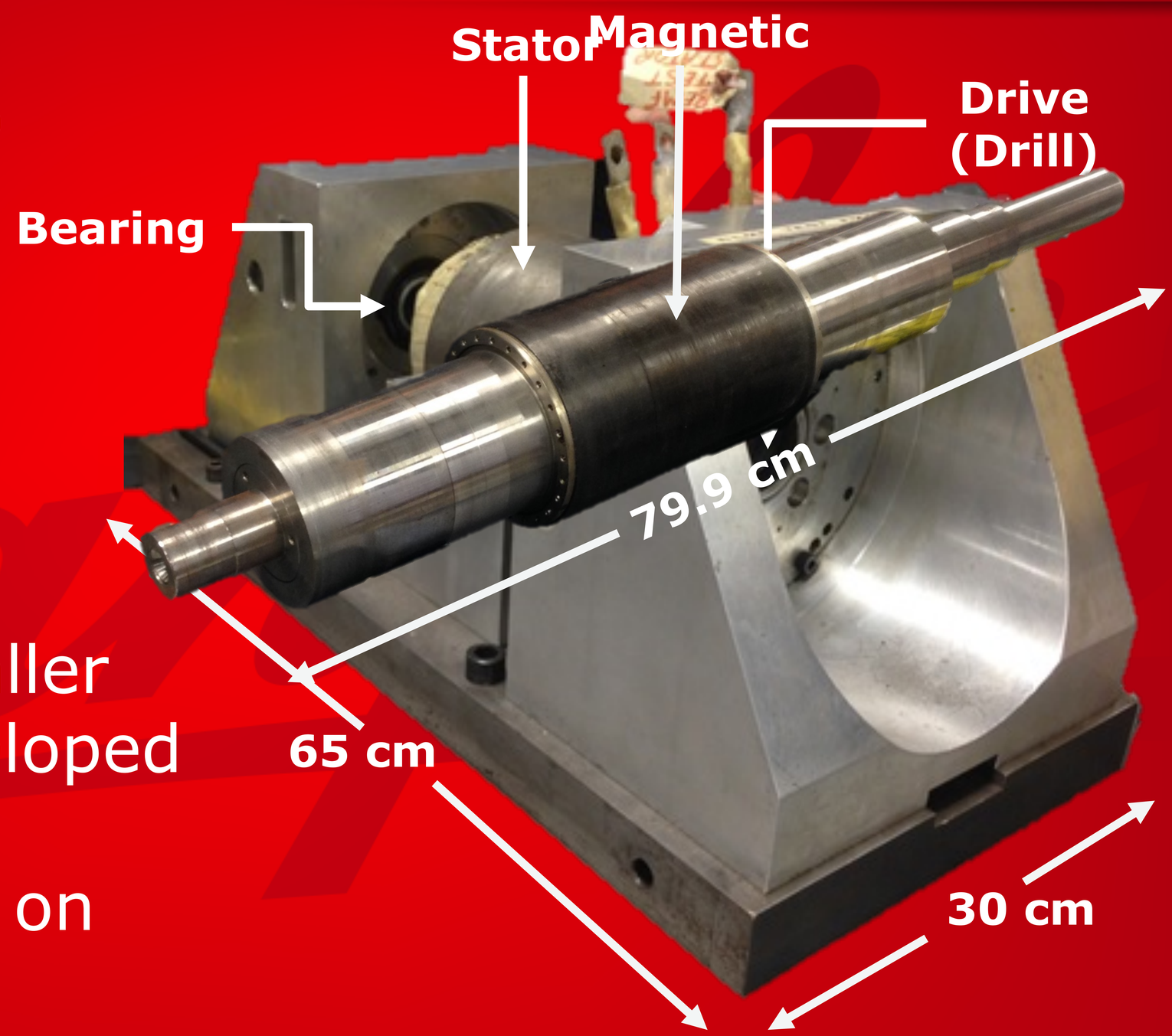

Design Constraints

- Must overcome magnetic force of 60-80 pounds
- Rotor must be centered within stator
  - Deviations in the height of components will compromise validity of quality tests
- Spatial Constraints:

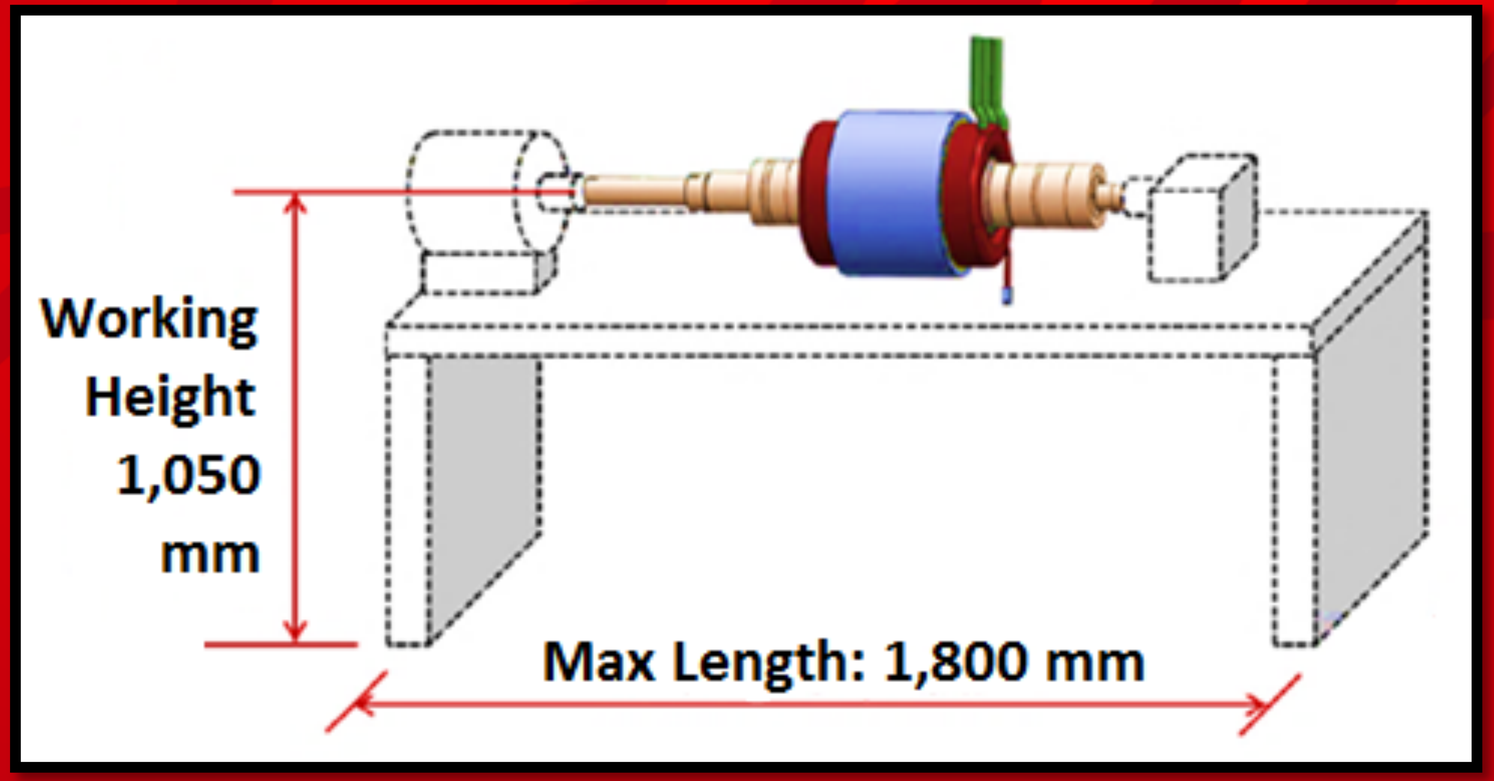

Project Goal

- Fully designed, tested and manufactured back EMF test fixture
- Conform to all design constraints outlined by Turbocor and stay within $4000 budget
- Final submission package to Turbocor:
  - Operation manual
  - 3D Prototype
  - Bill of materials
  - Drawing package

Design Configuration

- Rotor will be lowered by overhead gantry system
- Several options for design configuration
  - Rotor can then be moved into stator
  - Stator can be moved over rotor
  - Both can be moved
- Moving both = most ergonomically efficient

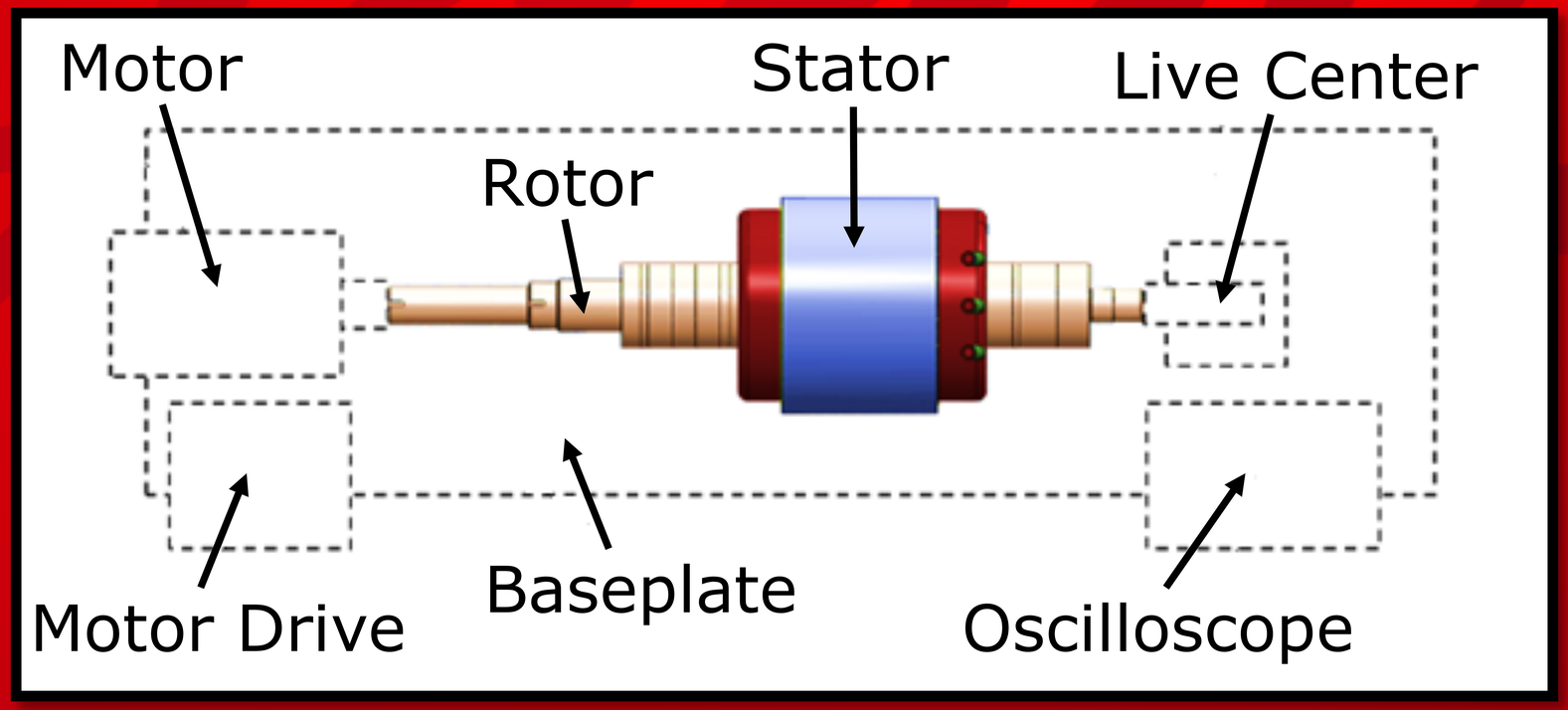

Rotor Centering Method

- Rotor must be axially aligned within stator
  - Maximum deviation:
    0.5 mm
- Centering options:
  - Bearings (used by old design)
  - Live center
- Live center chosen
  - Ease of operation
  - Turbocor preferred to not utilize bearings
- Support assembly needed to be designed

Live center used in design

Overcoming Magnetic Force

ENGINEERING TOMORROW

- 60-80 pound magnetic force exerted when rotor is inserted into stator

- Three options considered:
  - 1) Ball Screw
  - 2) Rack and Pinion
  - 3) Pneumatic Actuator

1)

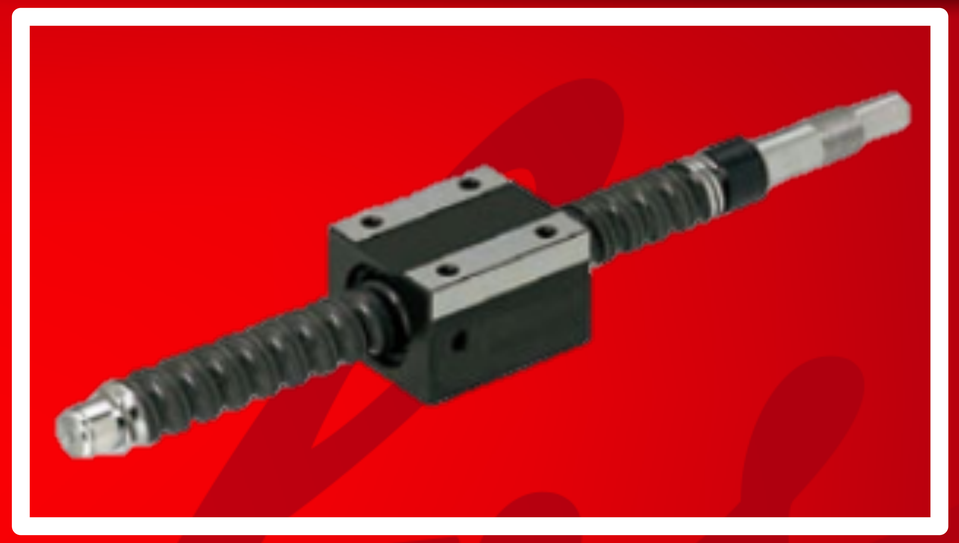

2)

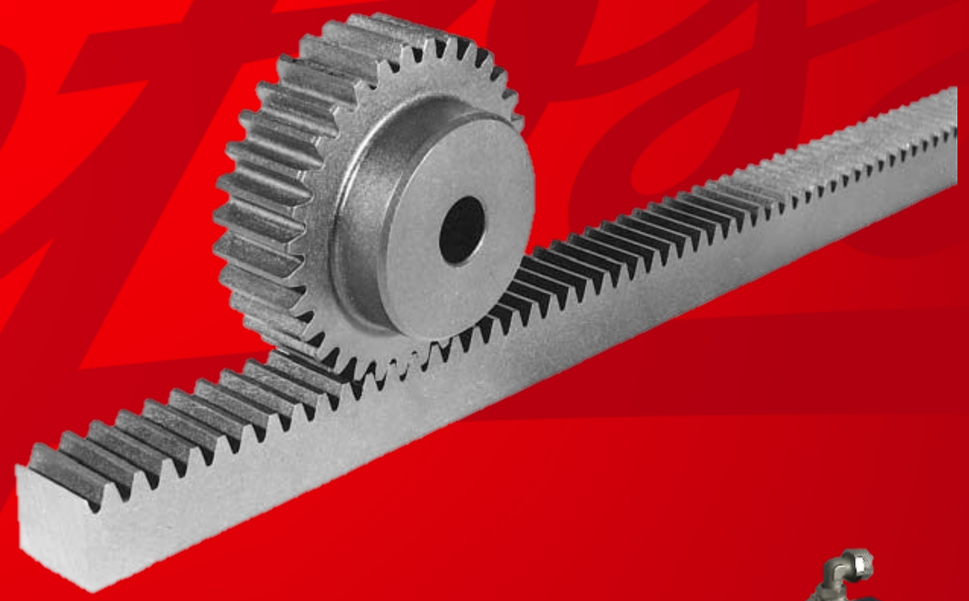

3)

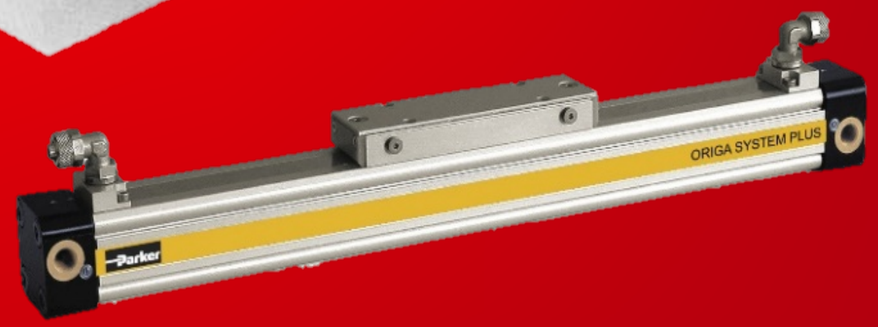

Weighted Decision Matrix

ENGINEERING TOMORROW

Design (1-10)	Safety (40%)	Simplicity (10%)	Ease of Use (20%)	Cost (30%)	Total
Ball Screw	8	8	7	8	**7.8**
Pneumatic Device	3	3	5	3	**3.4**
Rack and Pinion	8	5	7	6	**6.9**

- Ball Screw most viable option
  - Safe, simple, easy to use and cost-effective

Initial Prototype

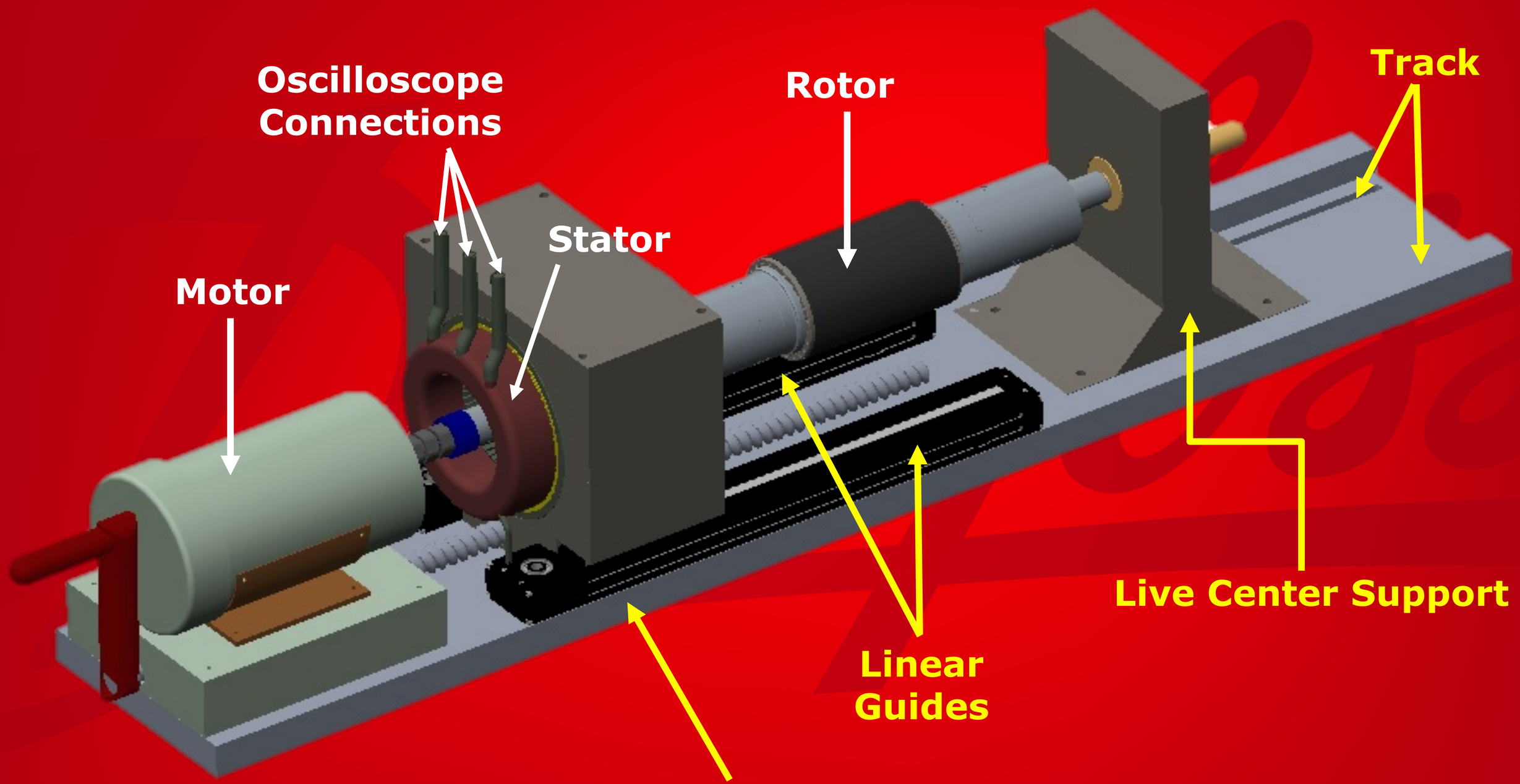

Final Prototype (1 of 6)

ENGINEERING TOMORROW

Test Fixture Length:
1750 mm (5 feet 8 in)

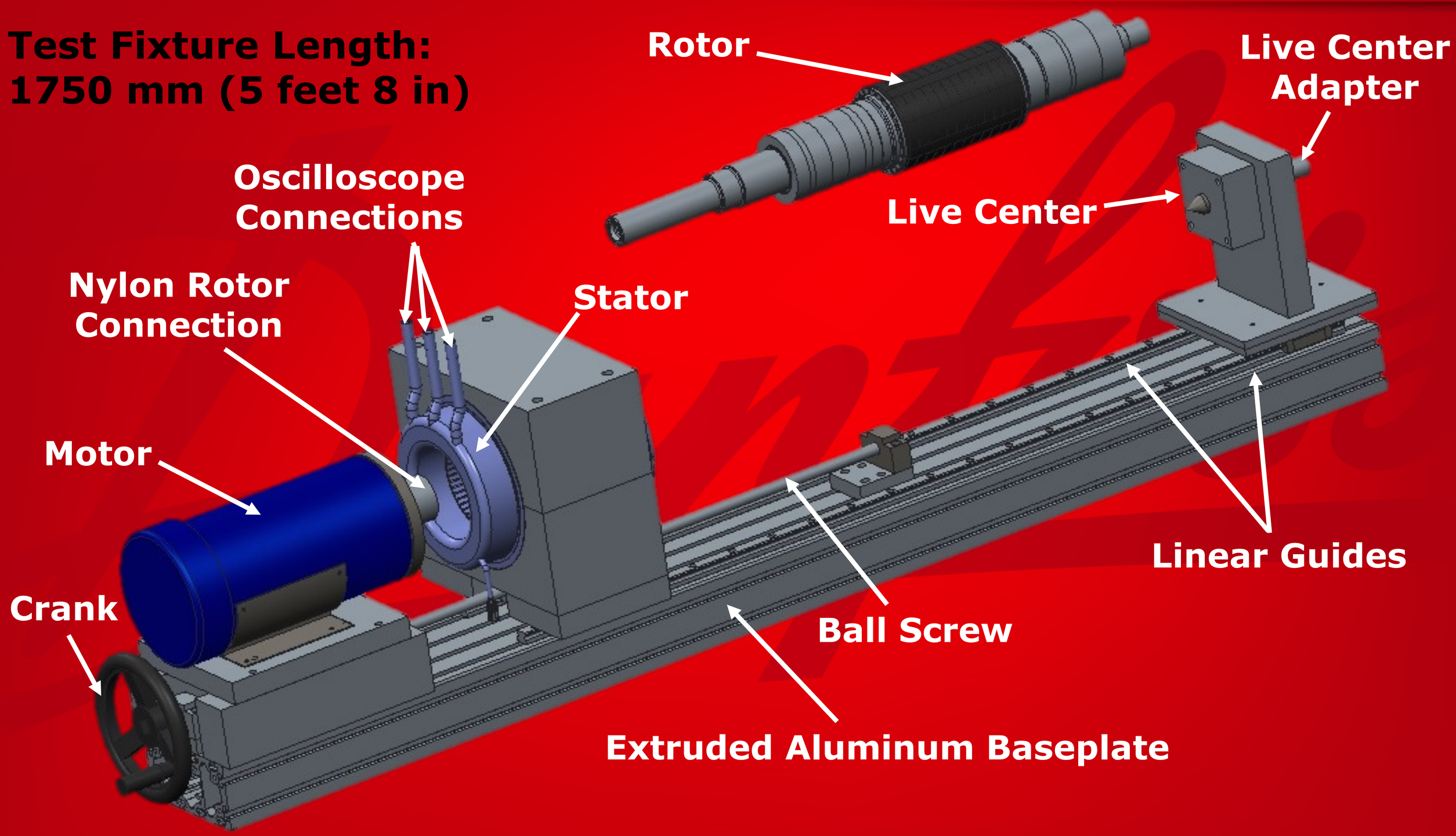

Final Prototype (2 of 6)

ENGINEERING TOMORROW

Test Fixture Length:
1750 mm (5 feet 8 in)

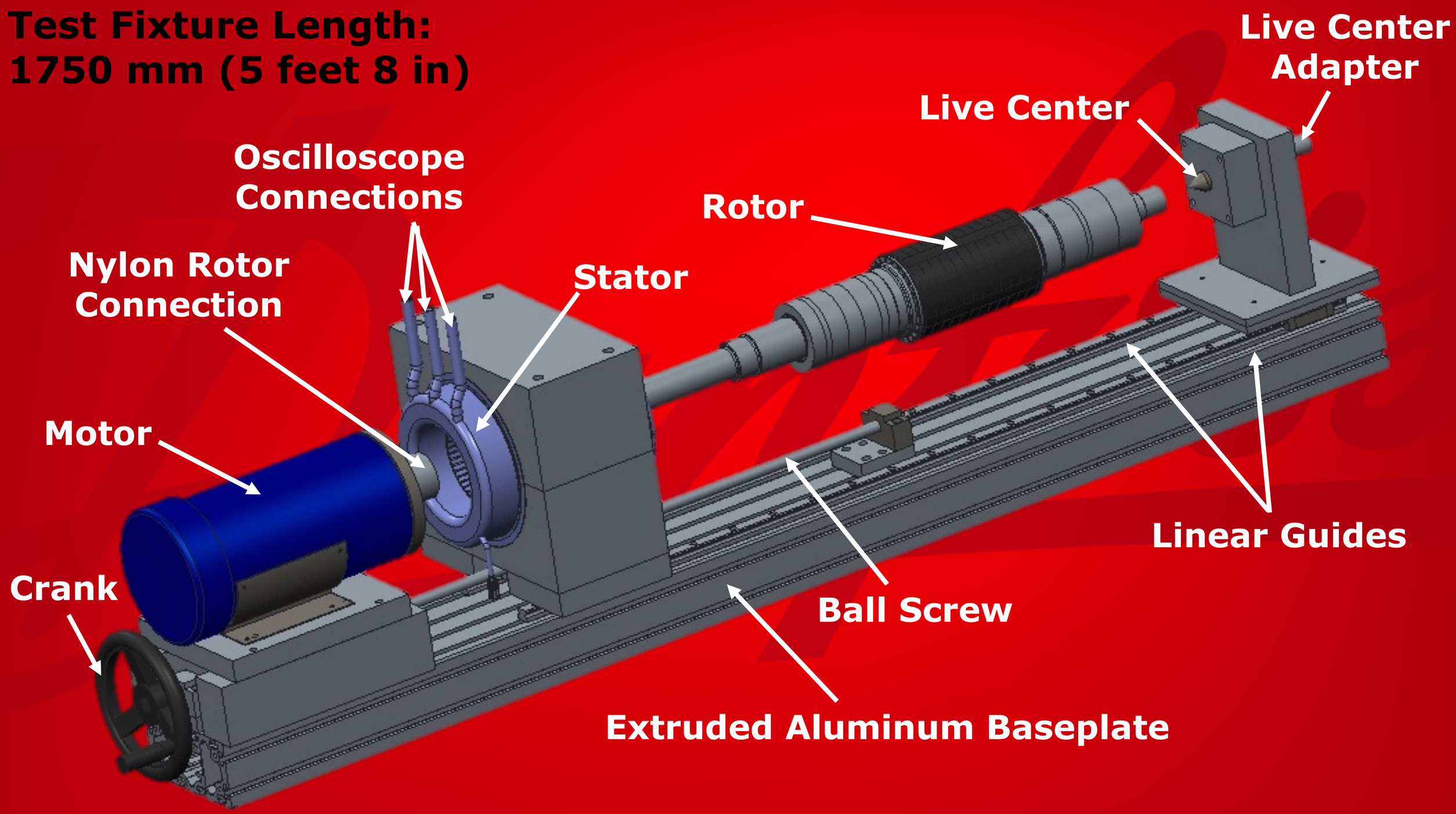

Final Prototype (3 of 6)

ENGINEERING TOMORROW

Test Fixture Length:
1750 mm (5 feet 8 in)

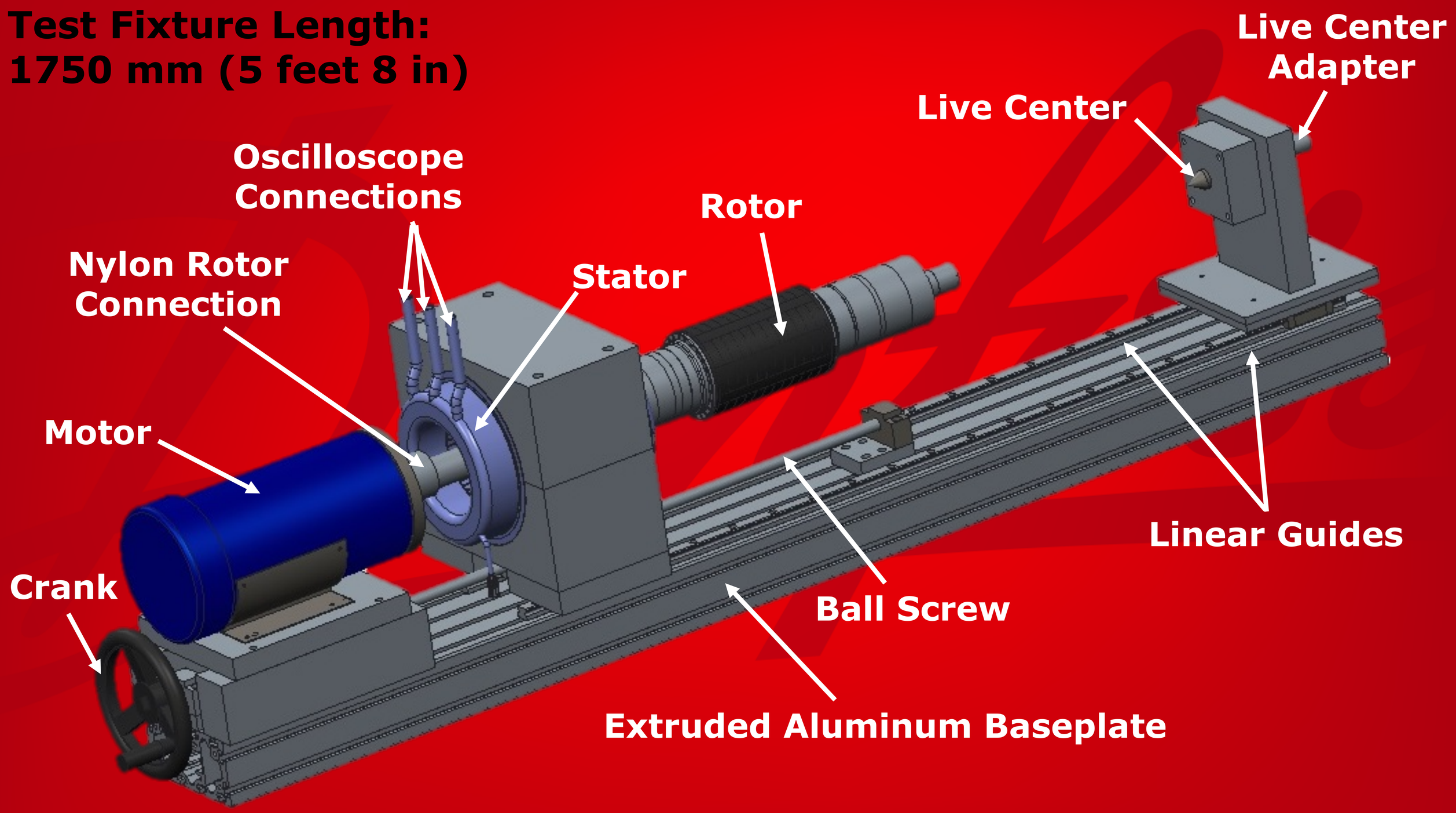

Final Prototype (4 of 6)

ENGINEERING TOMORROW

Test Fixture Length:
1750 mm (5 feet 8 in)

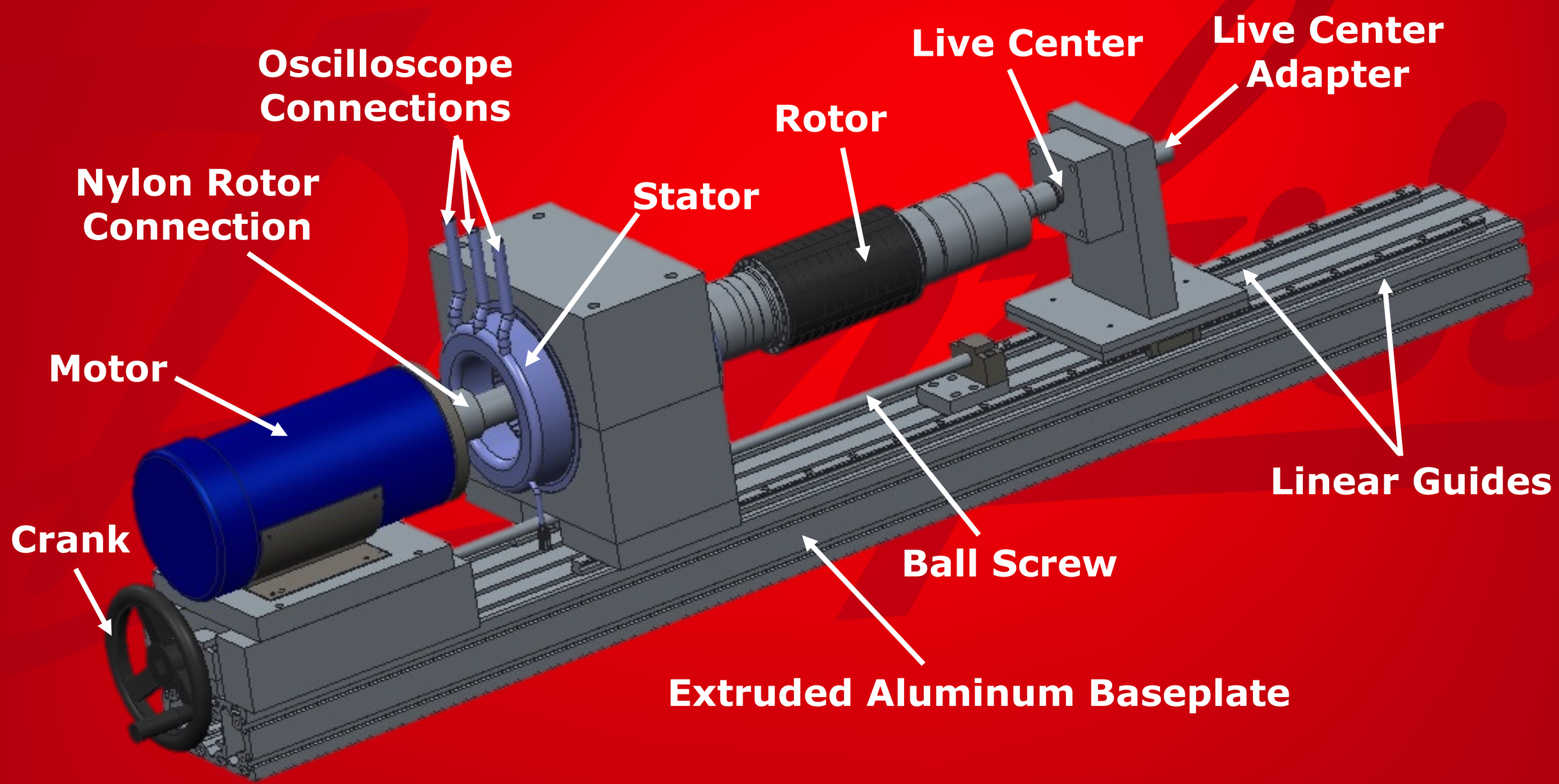

Final Prototype (5 of 6)

ENGINEERING TOMORROW

Test Fixture Length:
1750 mm (5 feet 8 in)

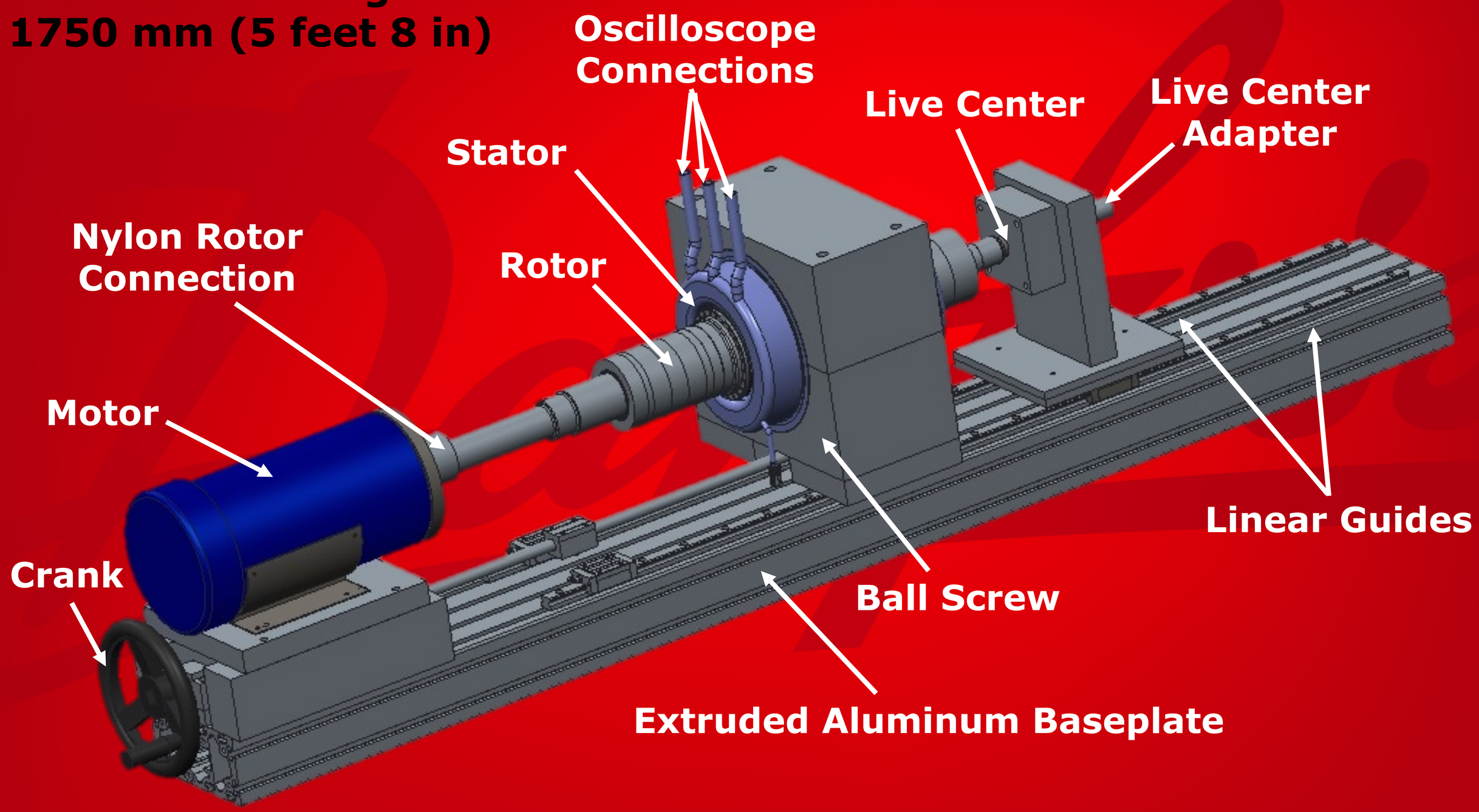

Final Prototype (6 of 6)

ENGINEERING TOMORROW

Test Fixture Length:
1750 mm (5 feet 8 in)

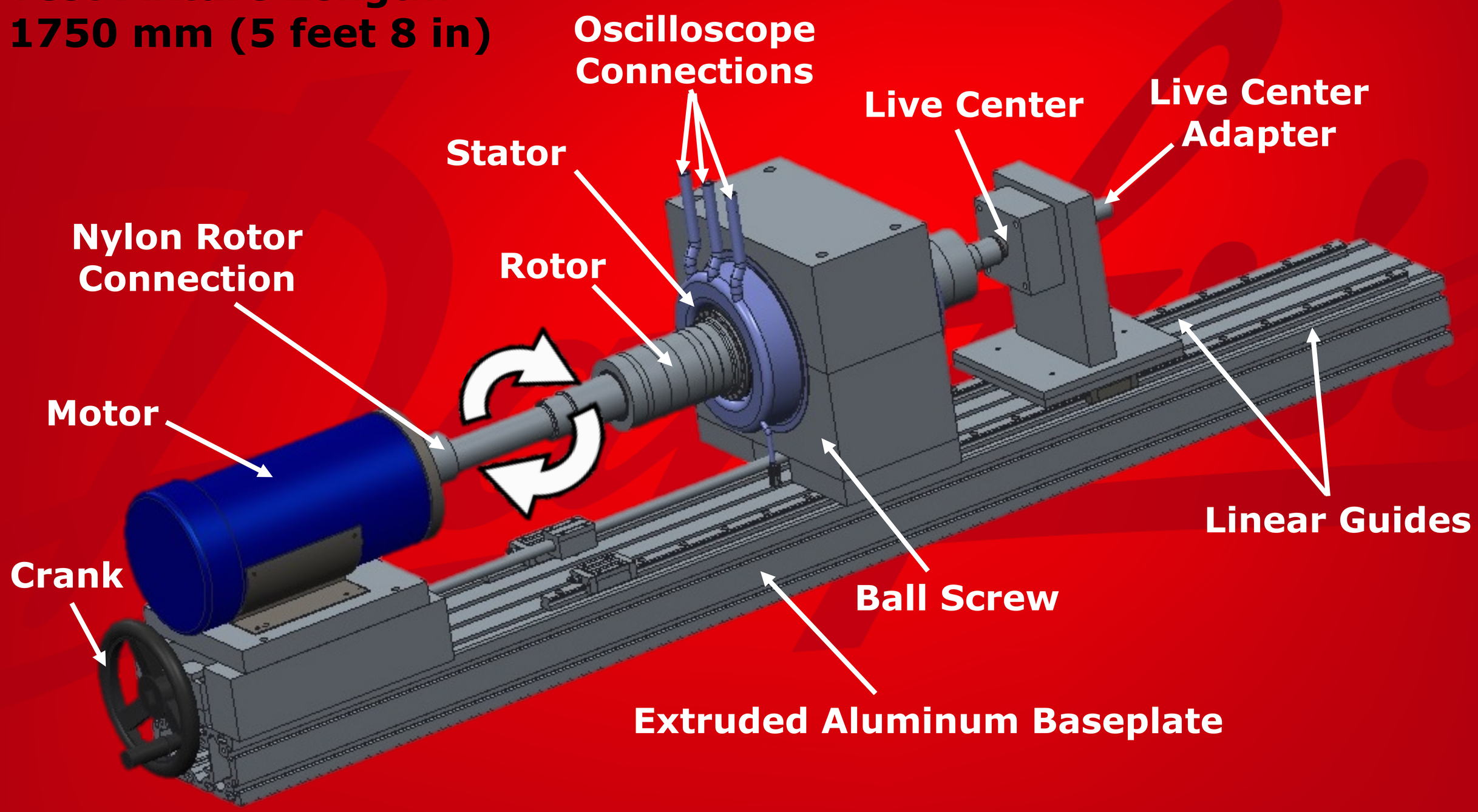

Extruded Aluminum Baseplate

ENGINEERING
TOMORROW

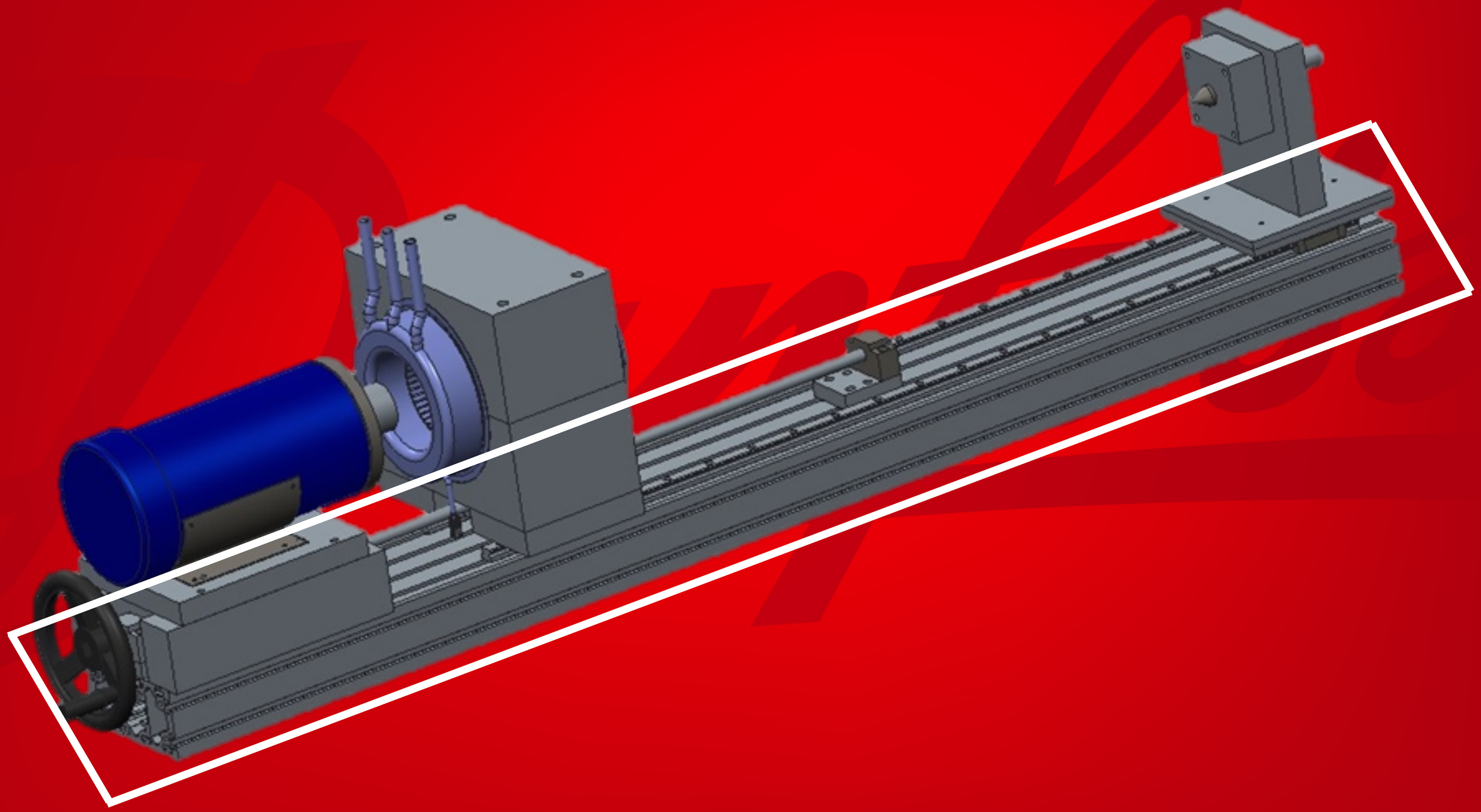

Russell Hamerski

Extruded Aluminum Baseplate

ENGINEERING TOMORROW

- All components fastened to 1750 mm extruded aluminum baseplate
- Components connected with fastening nuts
- Large cross section provides support and prevents deflection
- Allows for easy alignment of components

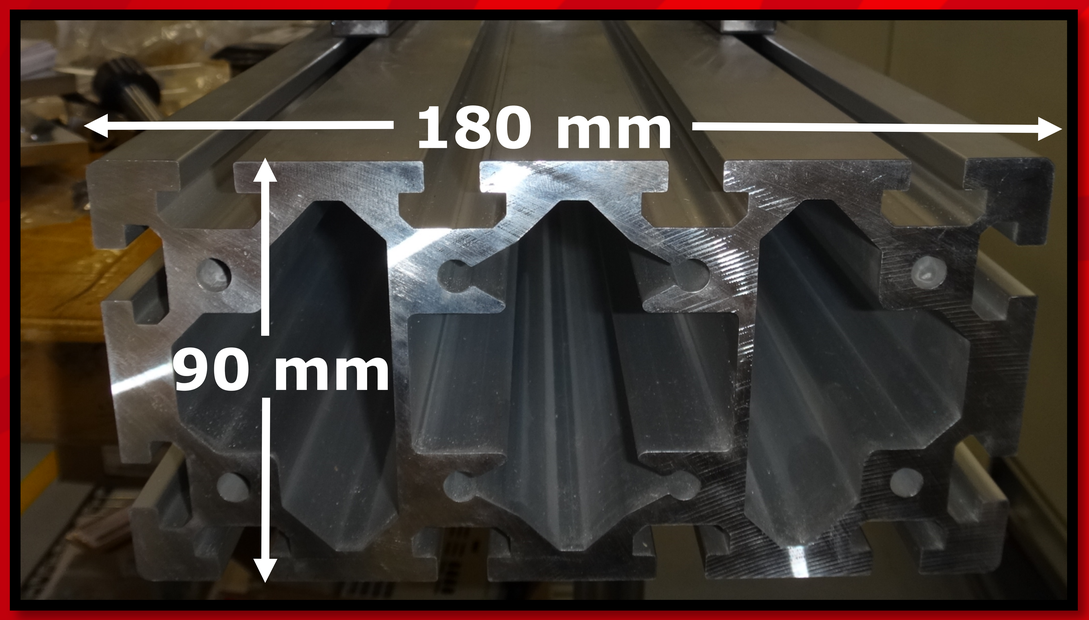

Cross section of extruded aluminum

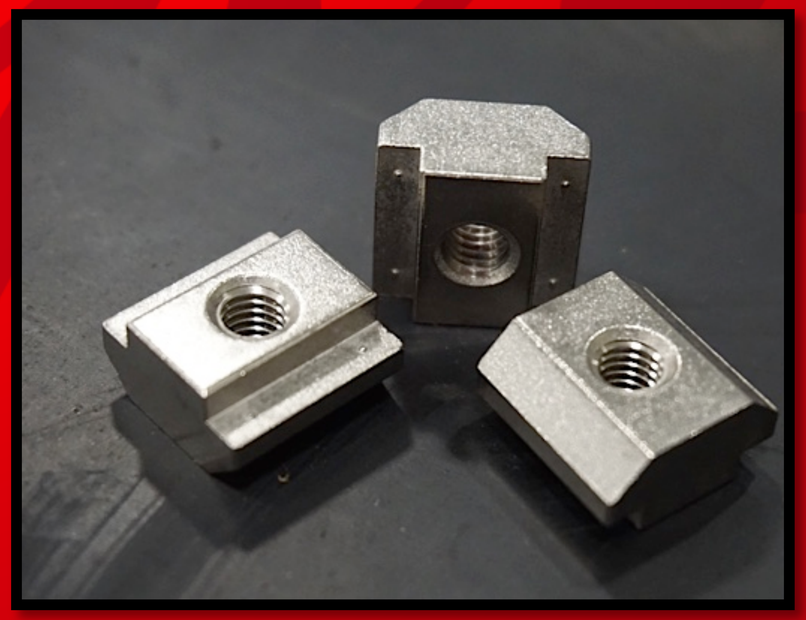

Fastener nuts

Motor Assembly

ENGINEERING
TOMORROW

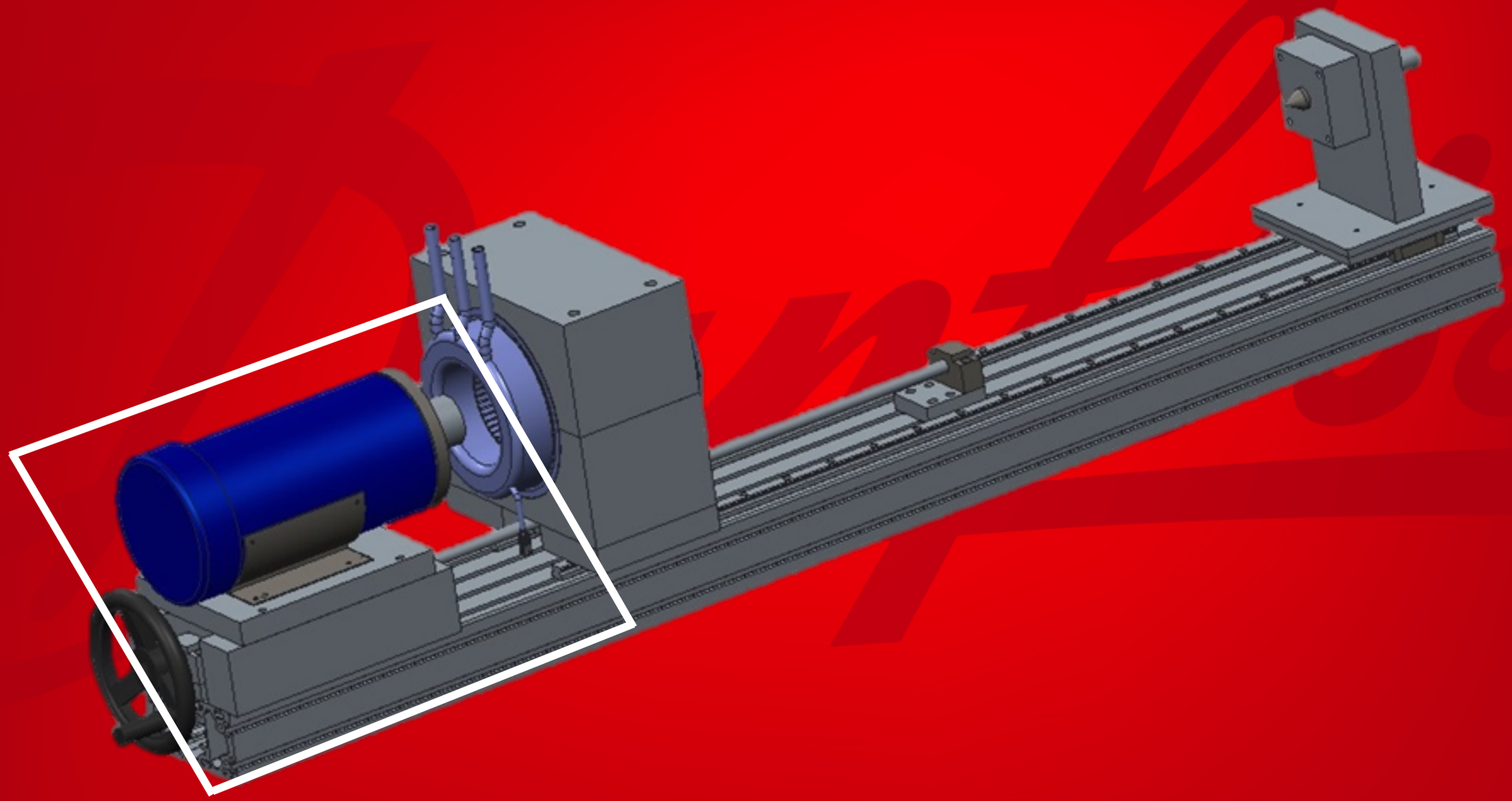

Russell Hamerski

TURBOCOR®

Motor System

- Marathon Electric AC Motor
  - 2 HP, 1800 RPM
  - 0.875 inch shank
- Speed controlled by Variable Frequency Drive (VFD)
  - 3 phase, 230 V input
- External bearing added to support motor shank
- Nylon rotor to motor connection added to reduce vibration

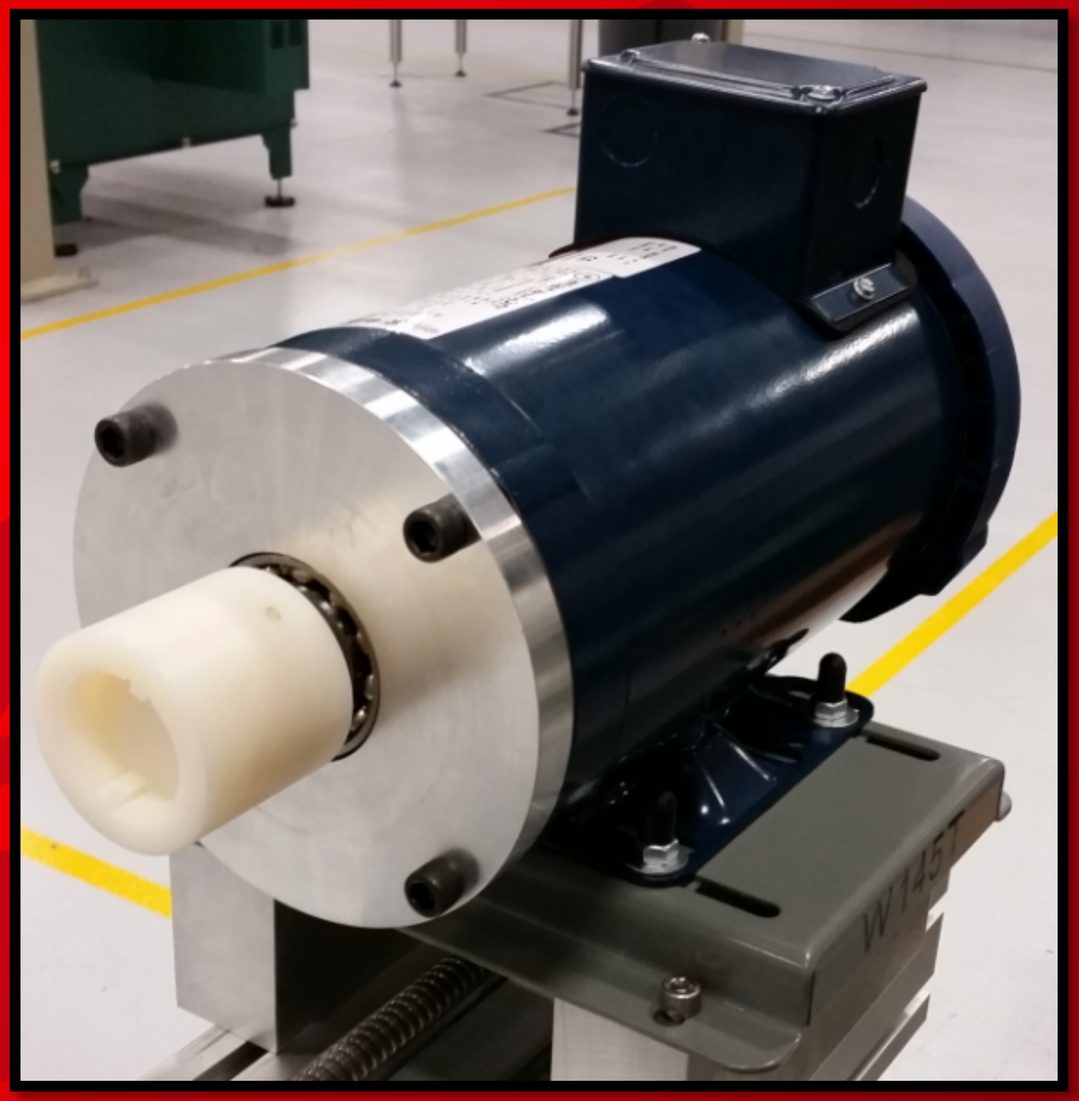

Assembled Motor

Ball Screw and Linear Guides

ENGINEERING
TOMORROW

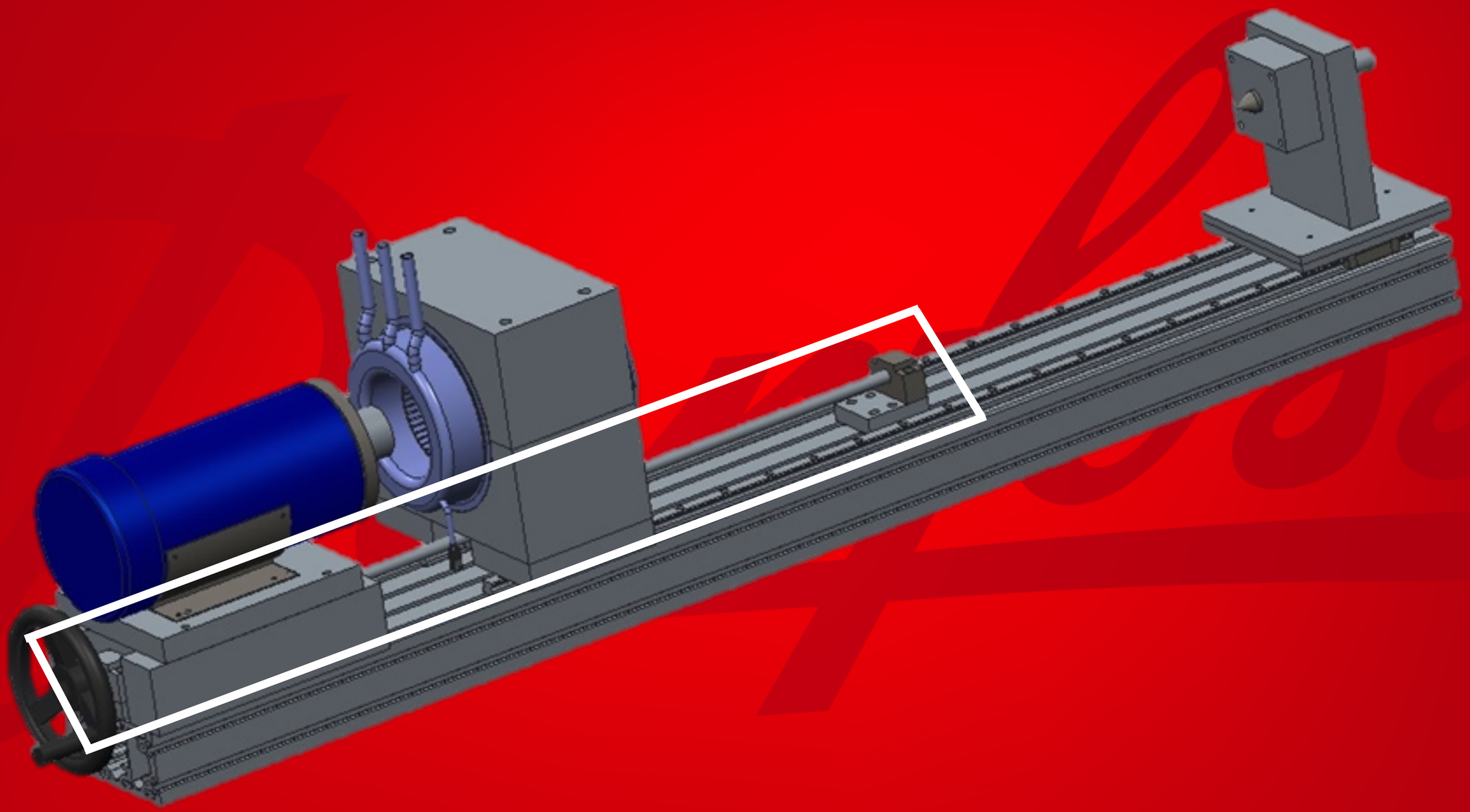

Team #4: VTT Rotor Back EMF Test Fixture

Slide 15 of x

Russell Hamerski

Final Presentation

TURBOCOR®

Ball Screw and Linear Guides

ENGINEERING TOMORROW

- Misumi Ball Screw selected with block mounting nut
  - 15 mm diameter, 10 mm lead
  - Dynamic load rating – 1150 pounds
- Misumi Heavy Load Linear Guides selected
  - **1240 mm in length**
  - **Two connecting blocks per guide**
  - Rated for 115 ft-lb static moment (FOS = 1.6)

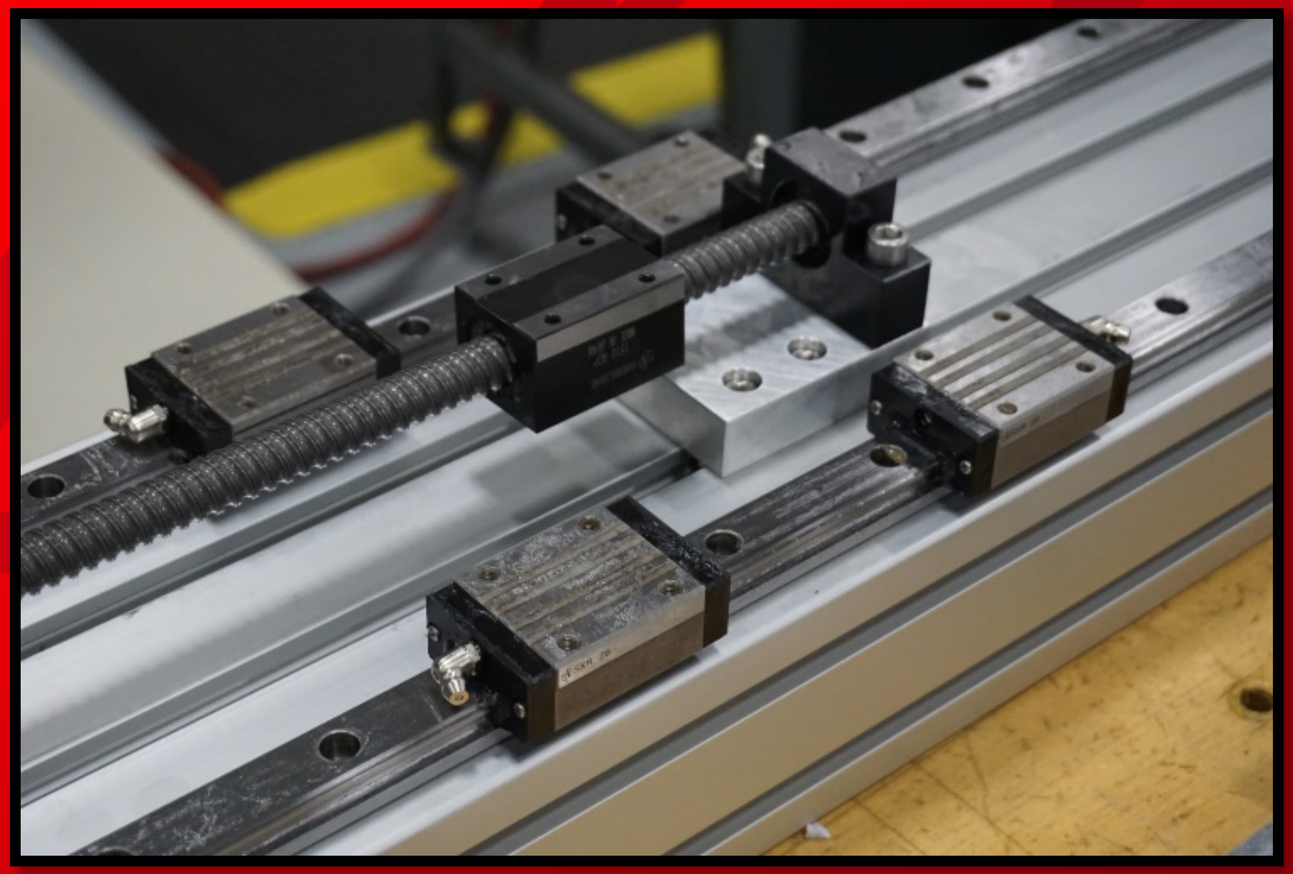

Ball screw and linear guides mid-assembly

Live Center Assembly

ENGINEERING
TOMORROW

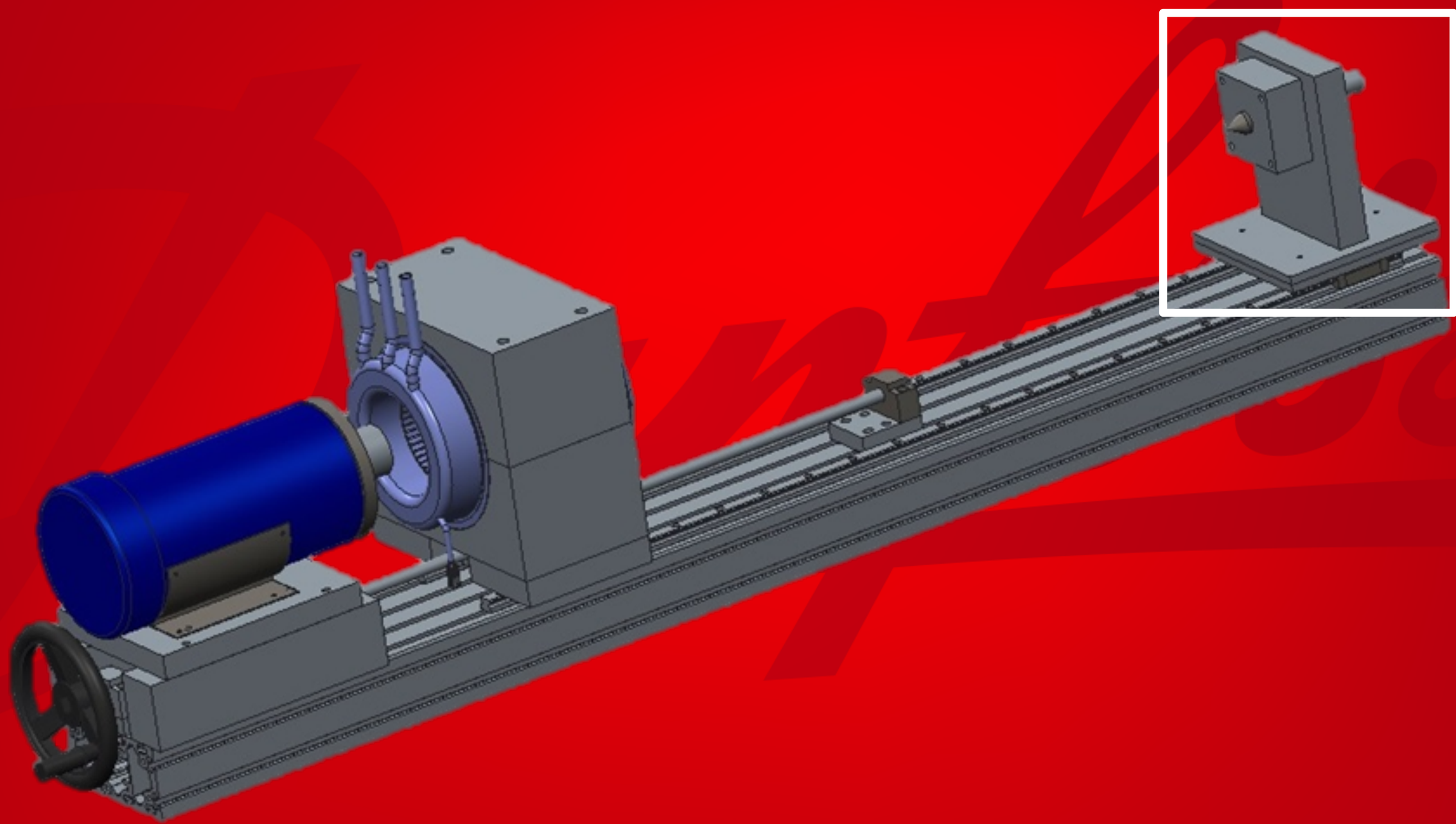

Russell Hamerski

TURBOCOR®

Live Center Assembly

ENGINEERING TOMORROW

- Live center used to center the rotor
- Will be press fit into support system
  - Secured by plate screwed into front of live center
- Original live center support rode inside grooved track
- Live center support rides on linear guides

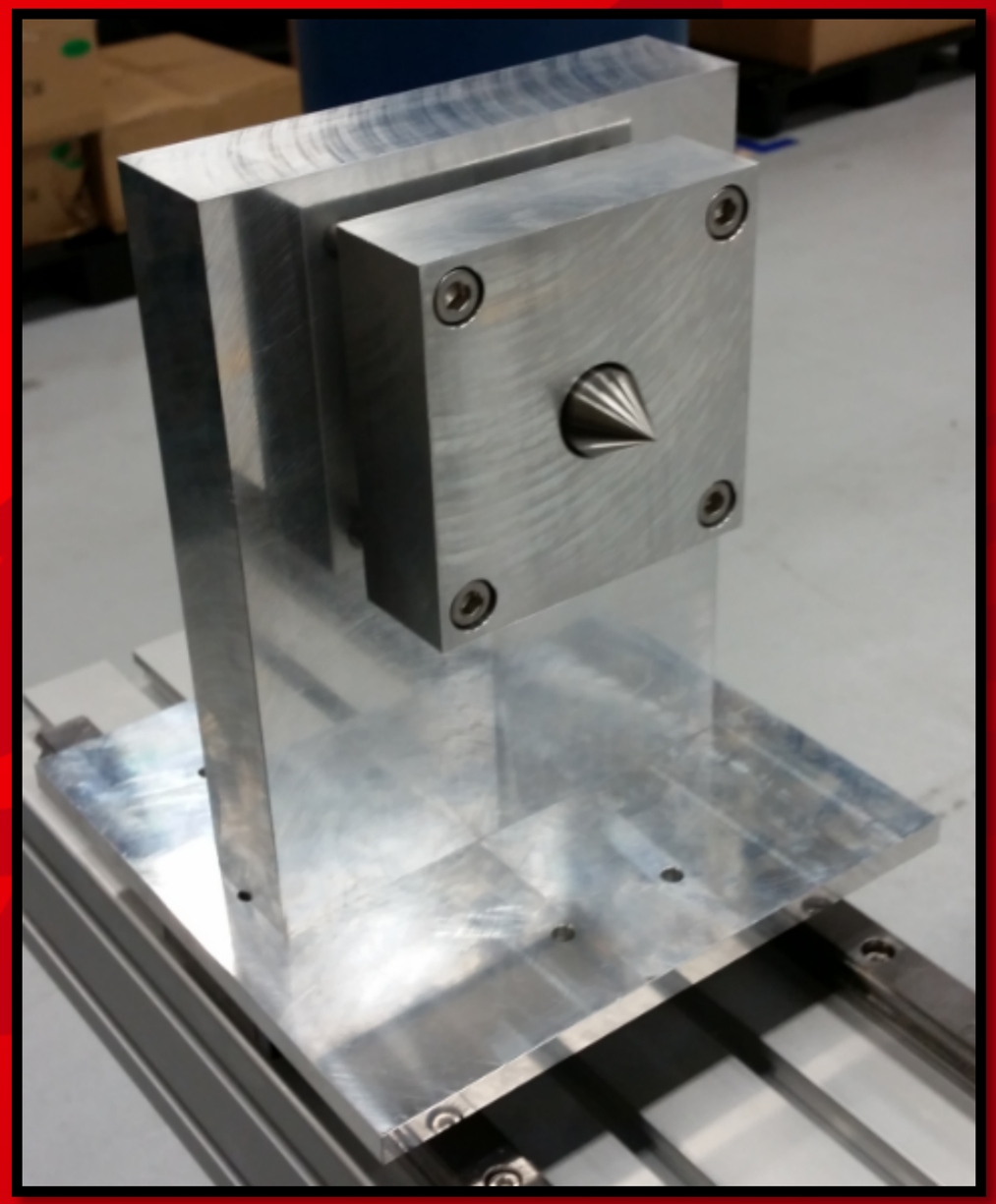

Live center assembly

Final Assembly

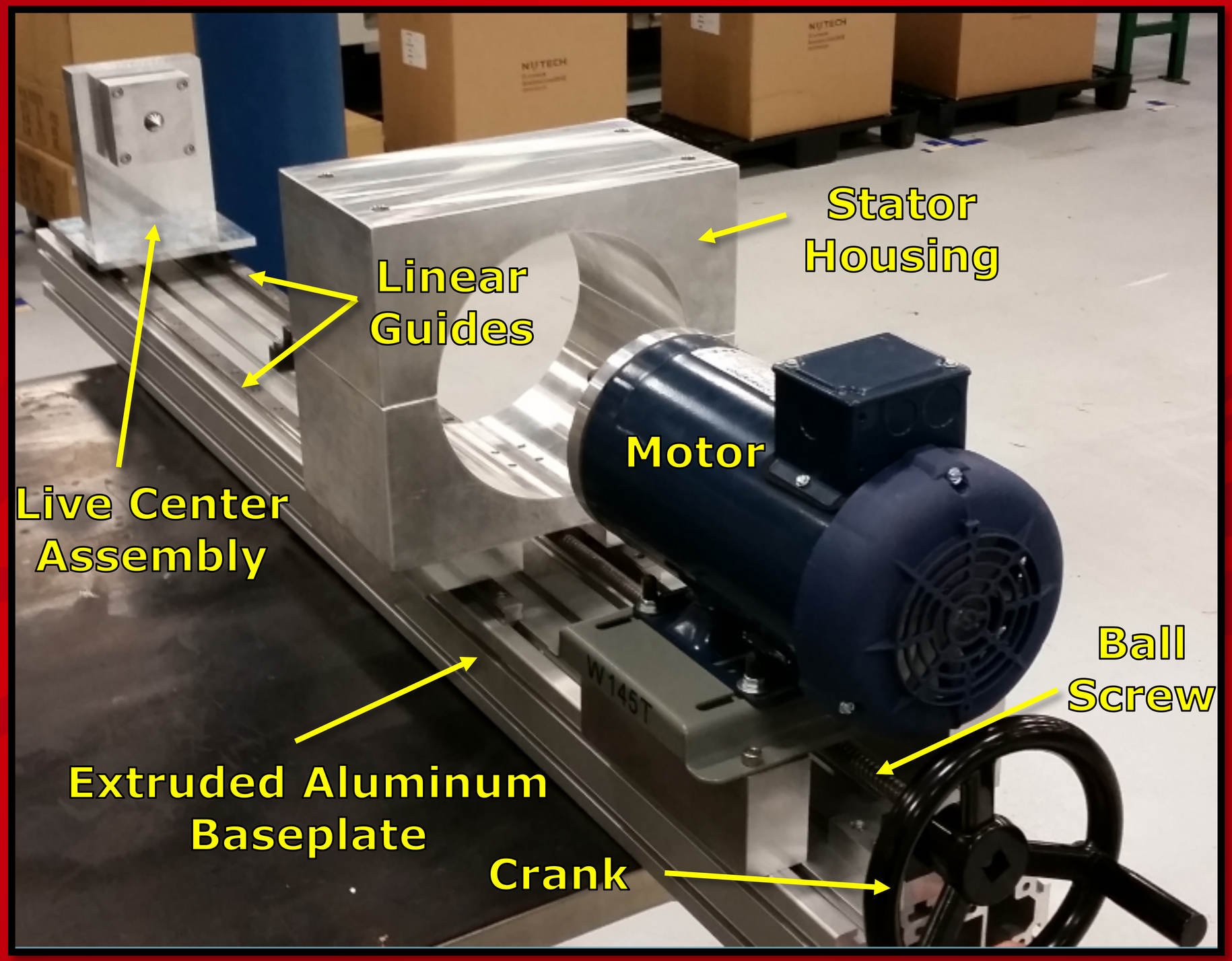

Test Video

ENGINEERING
TOMORROW

Danfoss

Russell Hamerski

TURBOCOR®

Safety Considerations

ENGINEERING TOMORROW

- Test fixture must comply with OSHA safety standards for prototypes
  - Emergency stop
  - Warning labels
  - Prototypes have less strict OSHA requirements
- Wired with fuses and proper wire gauge

OSHA® Occupational Safety and Health Administration

Alignment Testing

- Use caliper with 0.005 mm accuracy to determine y-axis level
- Dial gauge mounted to baseplate with 0.05 degree accuracy to determine x-axis level

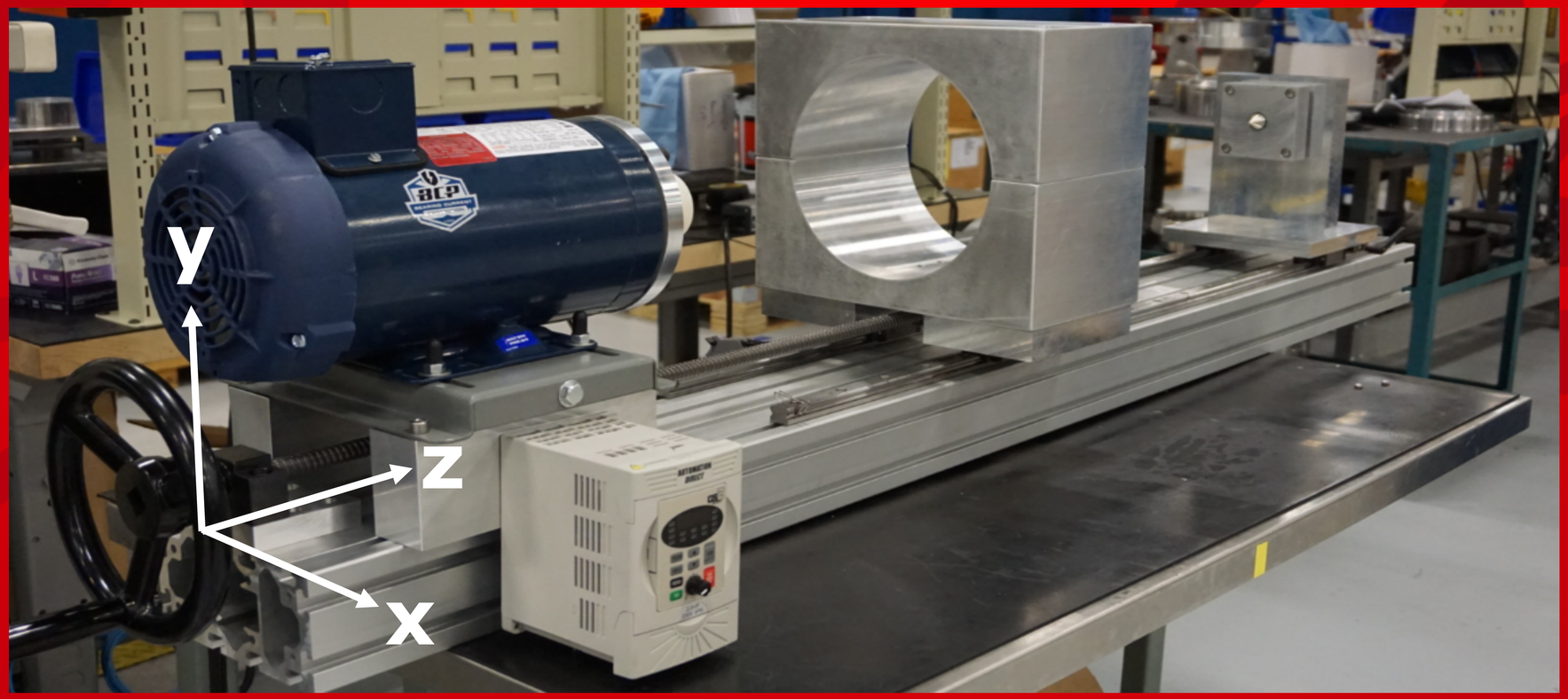

Diagram showing axis notation on assembly

Motor Testing

- Motor, VFD test to ensure proper function with dummy rotor
- Full test run of all fixture components

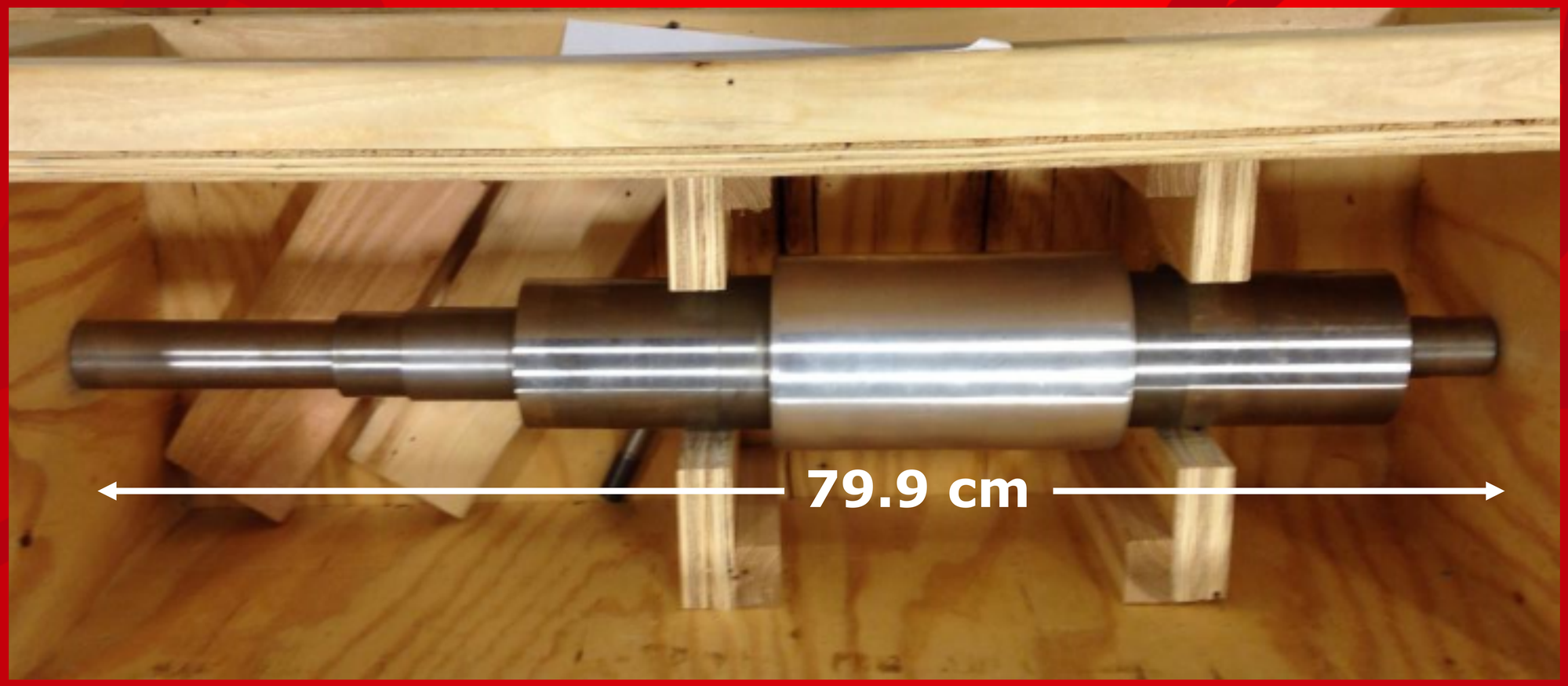

Dummy rotor to be used for testing with no magnetic portion

Budget Breakdown

ENGINEERING TOMORROW

$4000 Budget Allotted

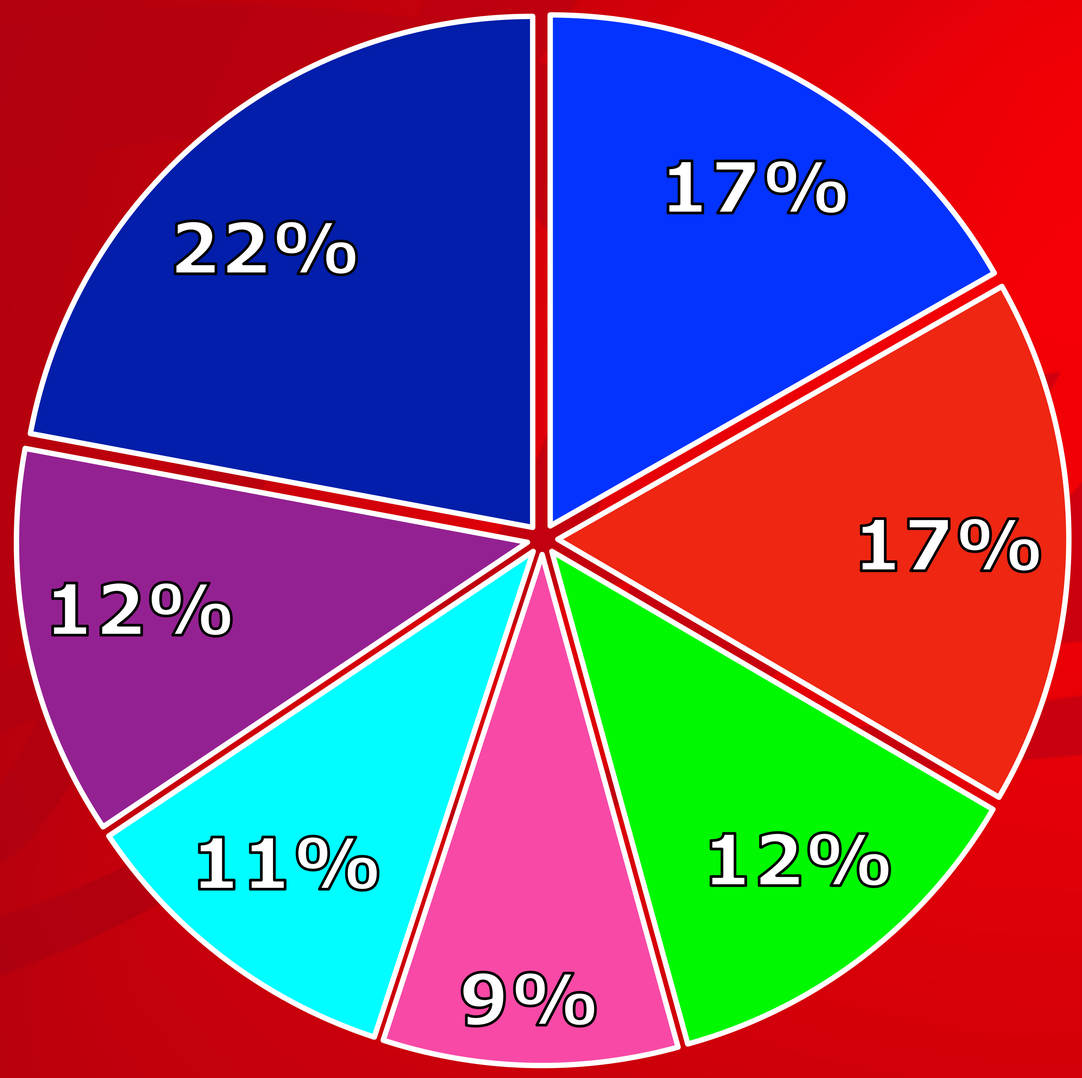

	Amount Spent
Raw Materials	$620
Linear Guides	$617
Motor	$455
Ball Screw	$345
Extruded Aluminum	$391
Electrical Supplies	$457
Hardware	$817
Total Remaining:	**$298**

Resource Allocation

ENGINEERING TOMORROW

Danfoss

Team 4 divided members into several roles:

- Team Leader: **Fall** **Spring**
  - Russell Hamerski/Thomas Razabdouski
- Secretary:
  - Thomas Razabdouski/Russell Hamerski
- Lead CAD Engineer:
  - Andrew Panek
- Financial Advisor:
  - Tim Romano
- Webmaster:
  - Andre Steimer

Gantt Chart

ENGINEERING
TOMORROW

Task Name	% Complete
Fall Semester	100%
Preliminary Design Stage	100%
Advanced Design Analysis	100%
Final Design Stage	100%
Parts Ordering	100%
Spring Semester	97%
Parts Ordering	100%
Assembly	100%
Testing and Presentation	72%

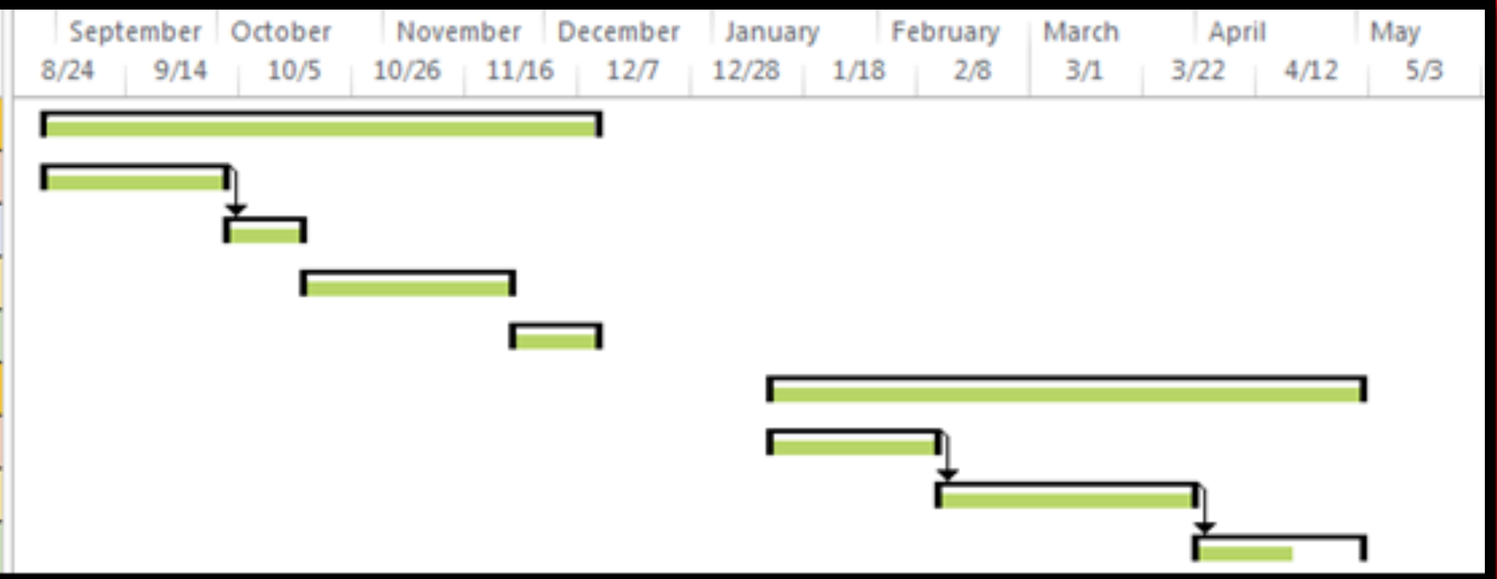

- Fall semester broken into four stages
- Spring semester broken into three stages
- Currently: Testing and Presentation Stage

Future Work

- Fixture is ready for implementation at Turbocor
- Rubber stoppers can be installed on linear guides
  - Limit motion of blocks
- Automation (if project was continued)
  - Ball screw and stator movement
  - Motor drive control
  - Oscilloscope readings

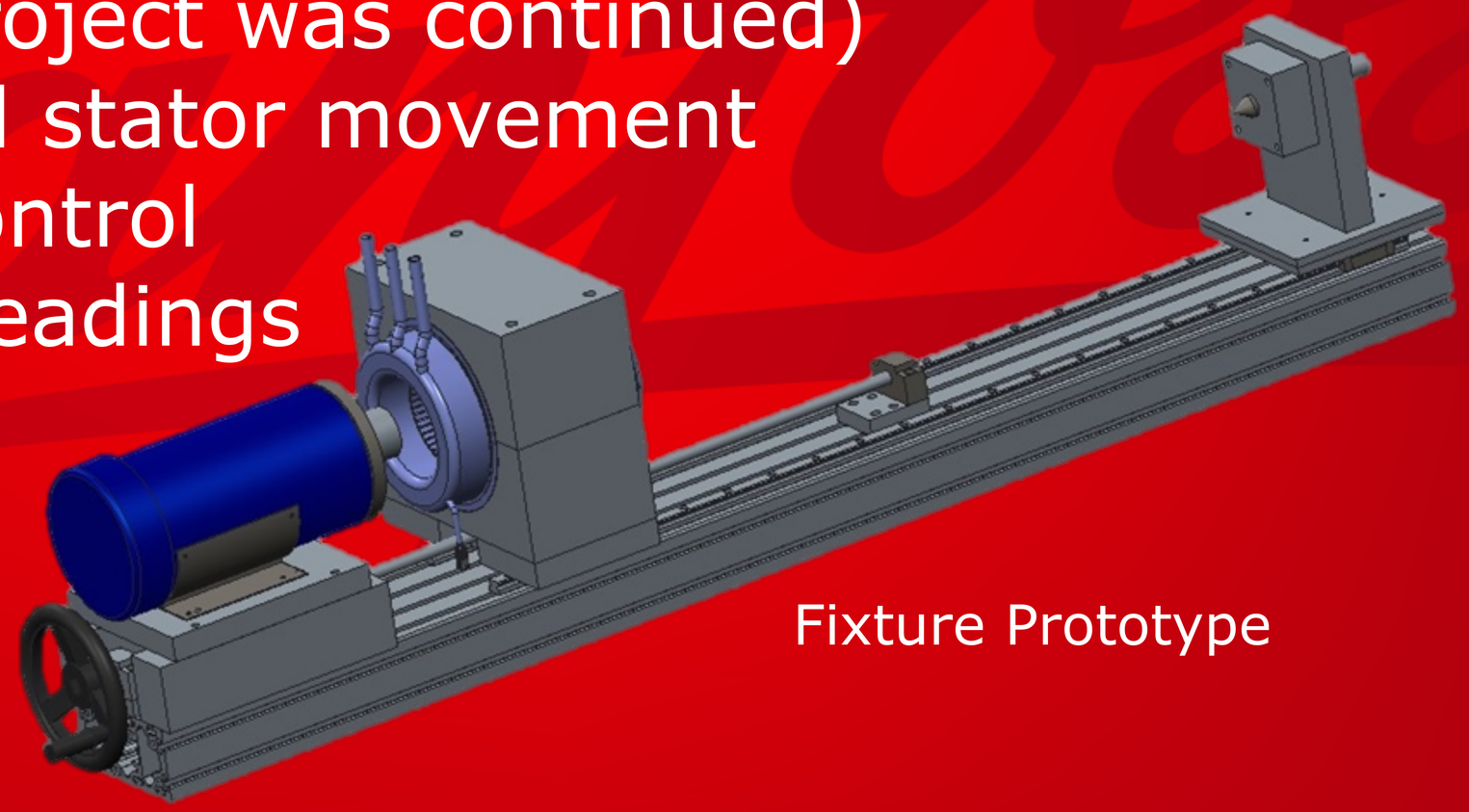

Fixture Prototype

Lessons Learned

ENGINEERING TOMORROW

- Hands on experience of going through the entire design process:

  Research and Idea Generation → Final Product

- Time management
- Communication skills development
- Technical skills development:
  - CAD modeling, engineering drawings
  - Exposure to common mechanical components
    - Ball screw, linear guides, motor operation, etc.

Conclusion

- Turbocor needed a method of quality control for third party manufactured rotors
- Team 4 was successful in designing and manufacturing test fixture
- Final product conforms to all design constraints
- Stayed under $4,000 budget
- Project is complete

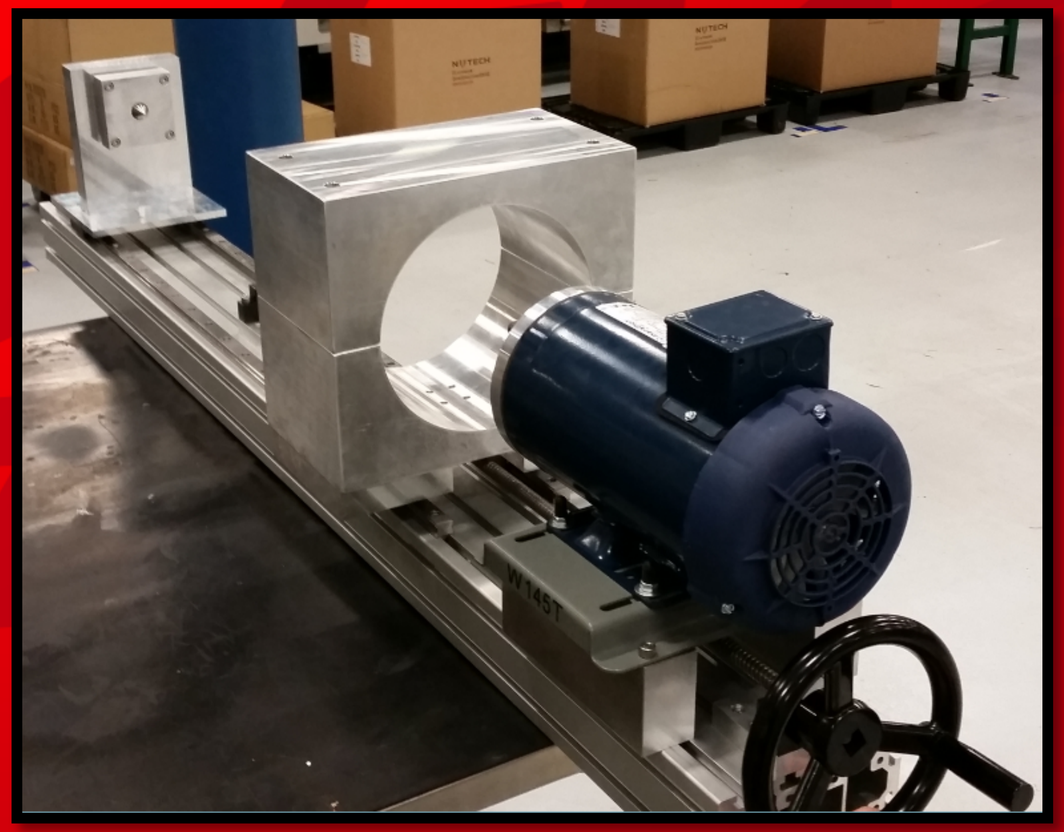

Assembled Test Fixture

Acknowledgements

Team Four would like to thank the following people for their assistance:

- Sponsor – Brandon Pritchard (Danfoss Turbocor)
- Faculty Advisor – Dr. Louis Cattafesta
- Professors – Dr. Nikhil Gupta & Dr. Chiang Shih

Additionally:

- Oliver Kabitzke (Danfoss Turbocor)
- Bruce Barnett (Danfoss Turbocor)
- Senior Design Teaching Assistants

Questions or Comments?

- For more information, see our website:
  http://eng.fsu.edu/me/senior_design/2015/team04/

Bearing Block Support

ENGINEERING
TOMORROW

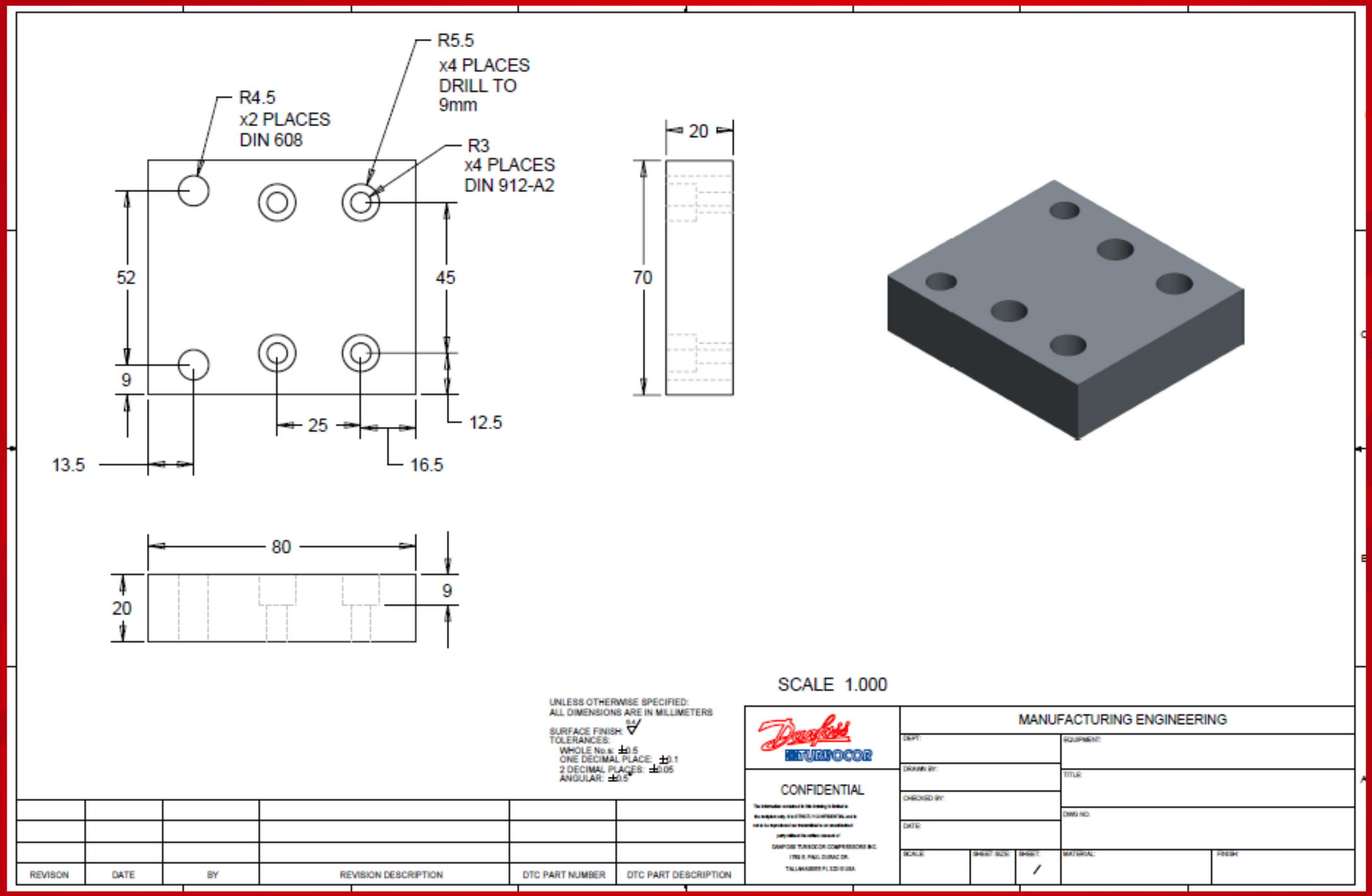

Team #4: VTT Rotor Back EMF Test Fixture **Final Presentation**

Appendix Slide I

TURBOCOR®

Motor Bearing Support

ENGINEERING
TOMORROW

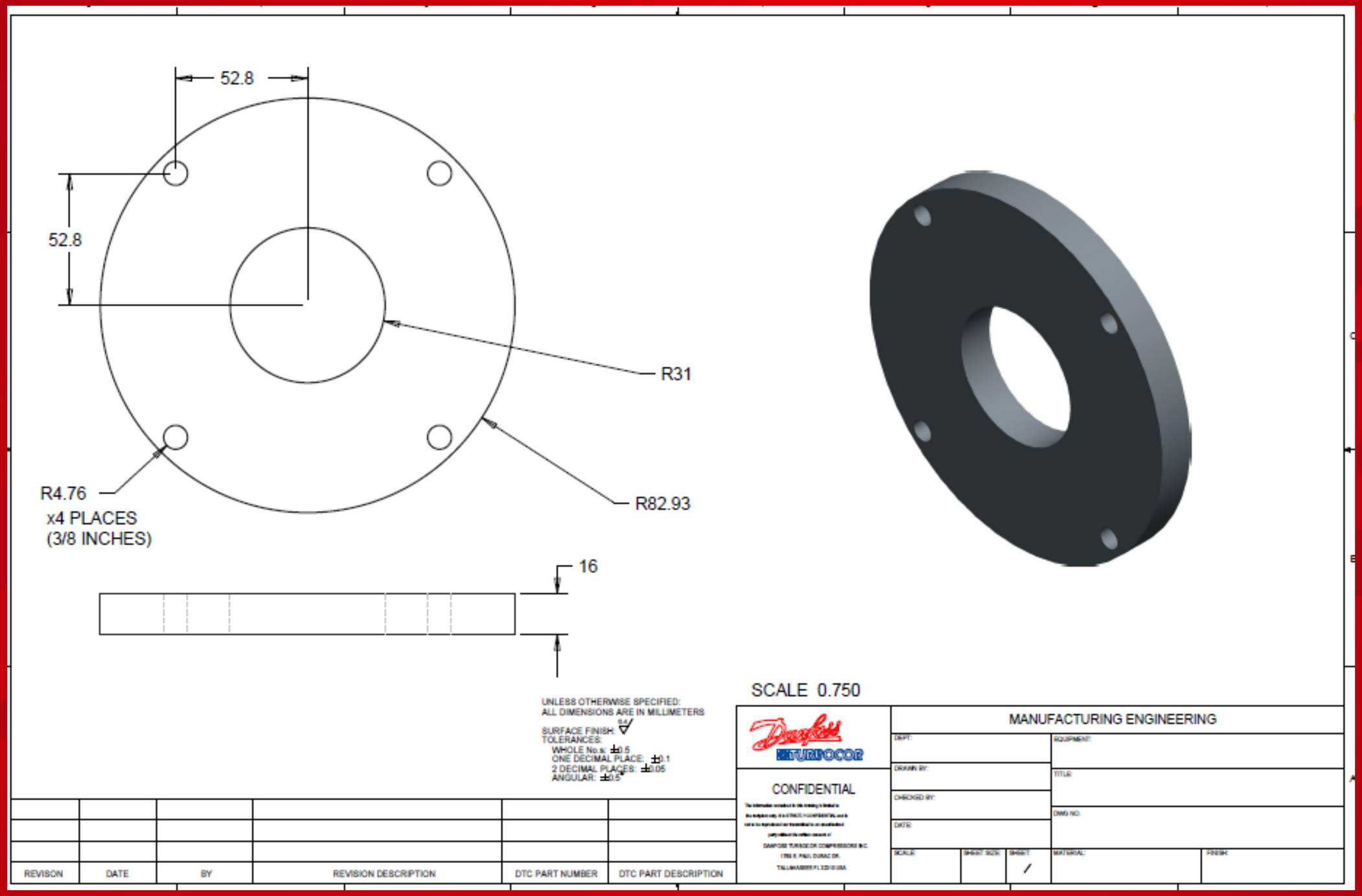

Team #4: VTT Rotor Back EMF Test Fixture **Final Presentation**

Appendix Slide II

TURBOCOR®

Bottom of Stator Housing

ENGINEERING
TOMORROW

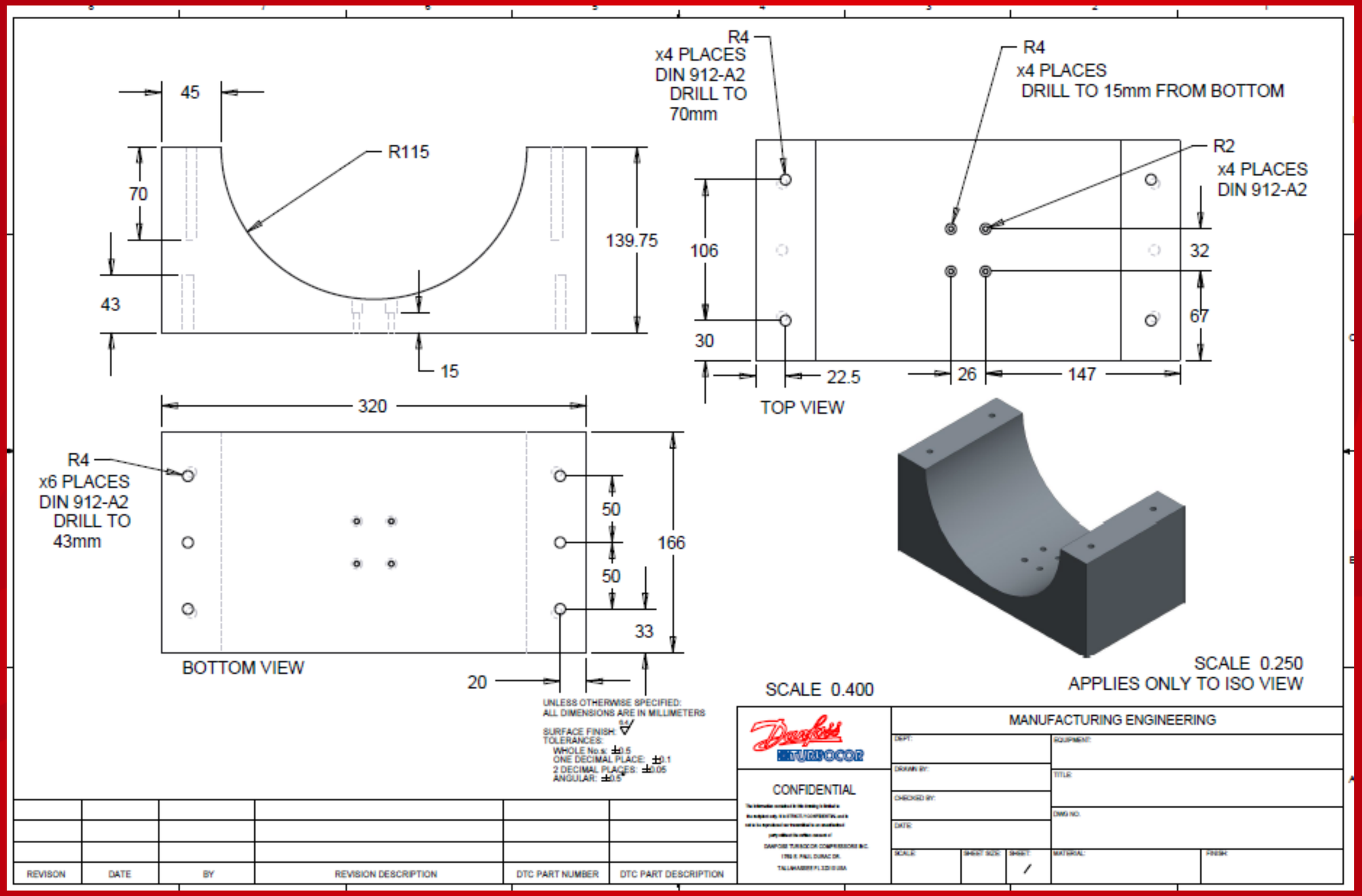

Team #4: VTT Rotor Back EMF Test Fixture **Final Presentation**

Appendix Slide III

TURBOCOR®

Top of Stator Housing

ENGINEERING
TOMORROW

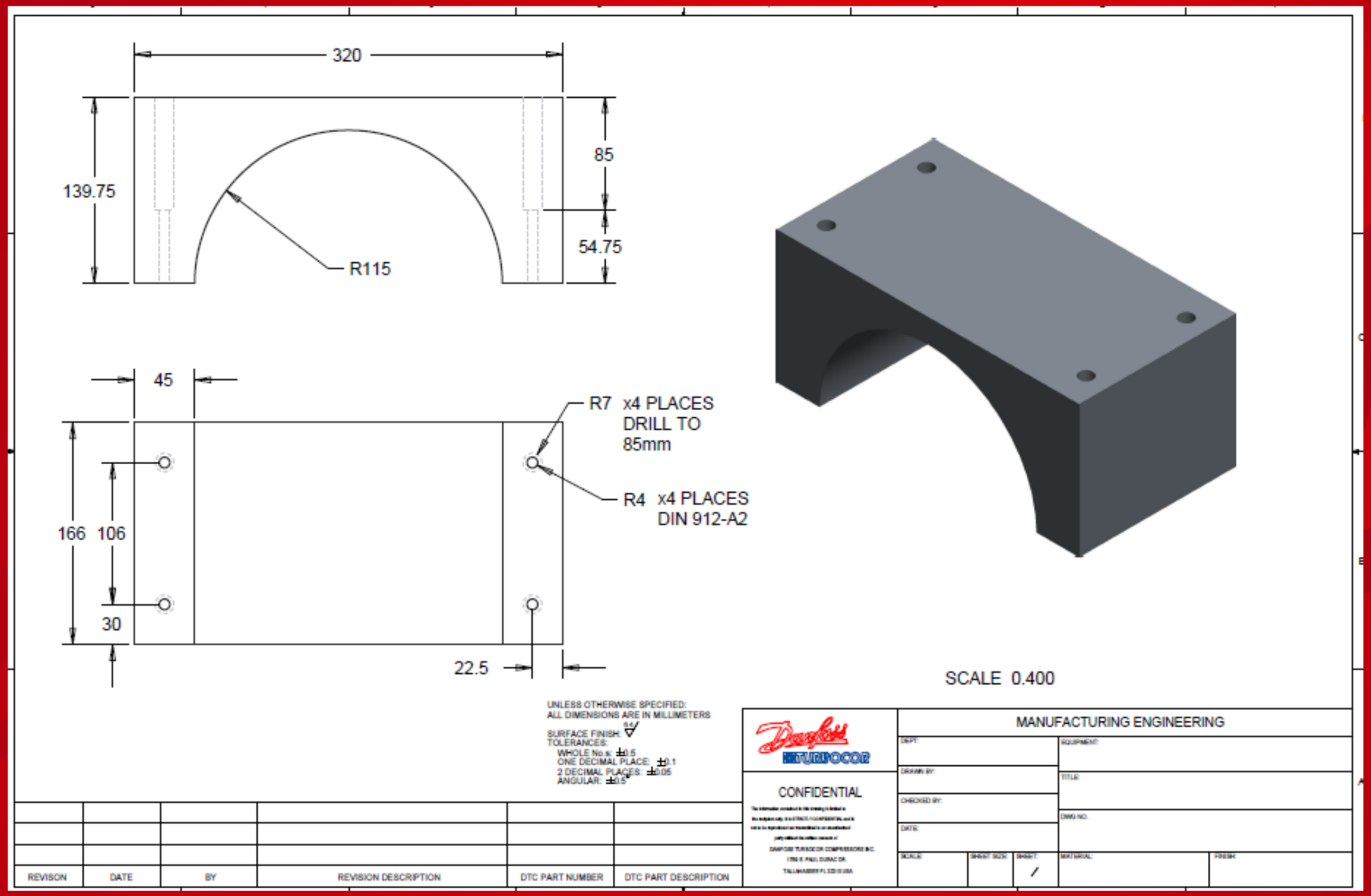

Team #4: VTT Rotor Back EMF Test Fixture **Final Presentation**

Appendix Slide IV

TURBOCOR®

Linear Guide Spacer

ENGINEERING
TOMORROW

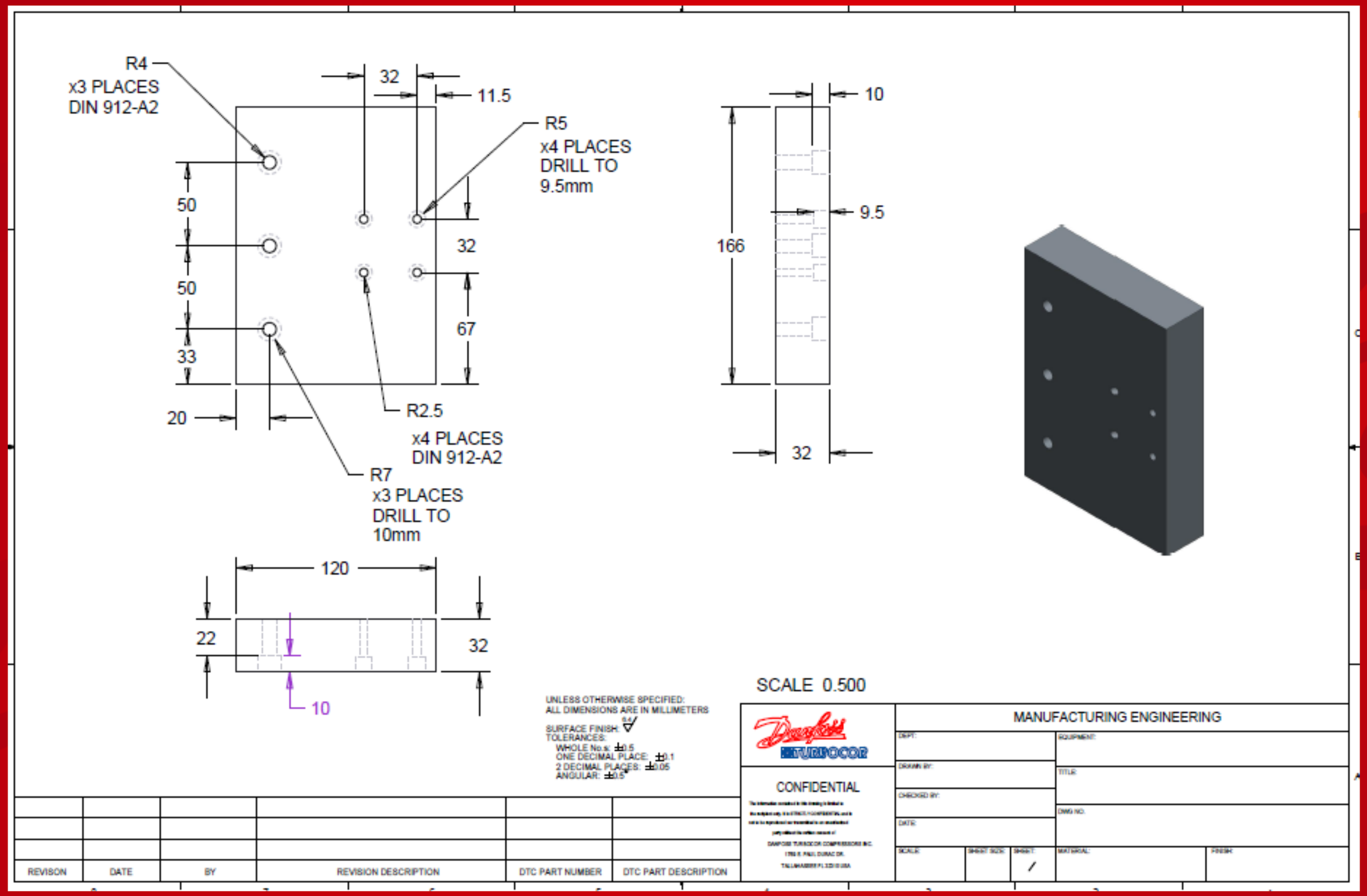

Team #4: VTT Rotor Back EMF Test Fixture **Final Presentation**

Appendix Slide V

TURBOCOR®

Live Center Baseplate

ENGINEERING TOMORROW

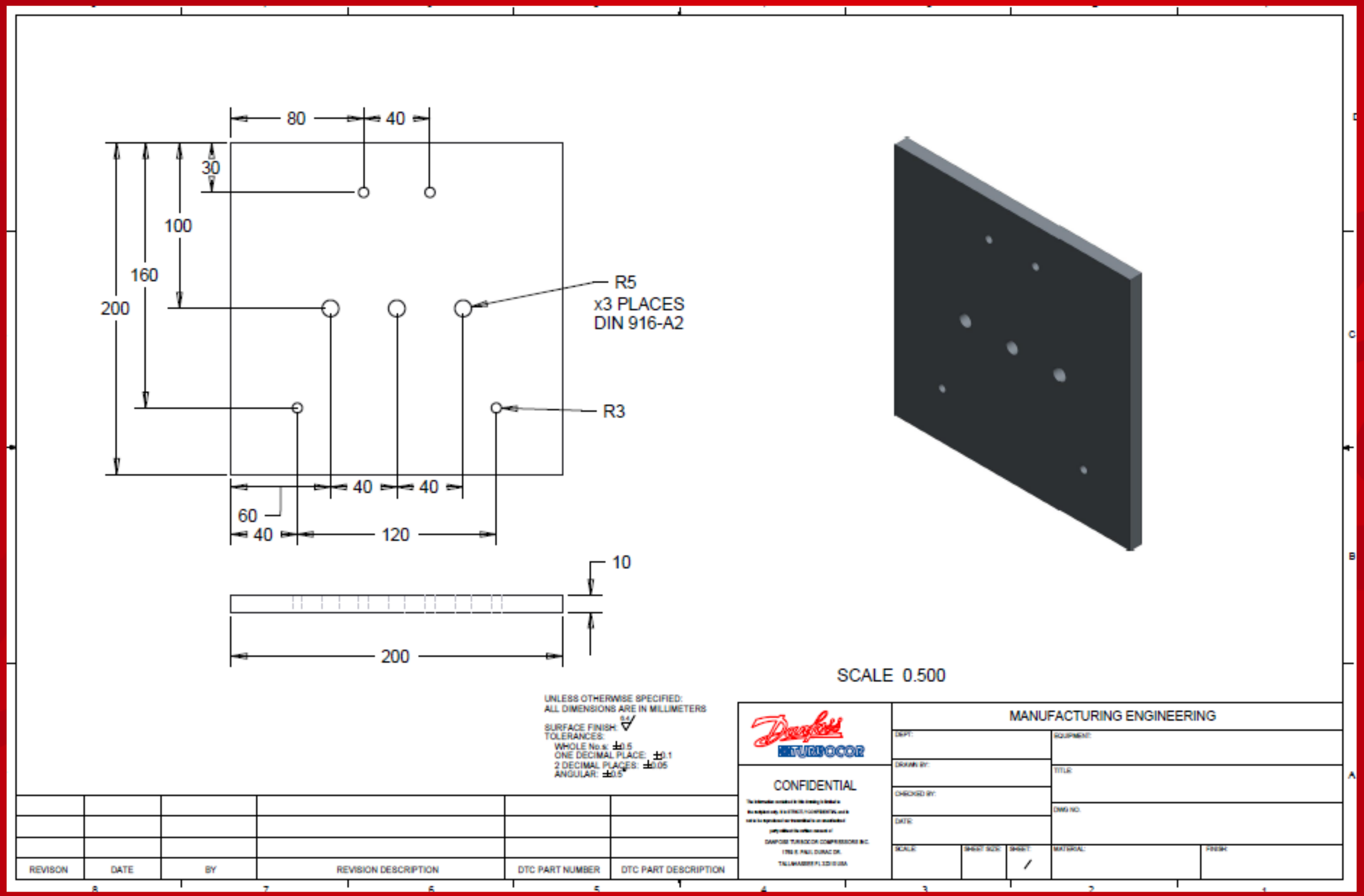

Team #4: VTT Rotor Back EMF Test Fixture **Final Presentation**

Appendix Slide VI

TURBOCOR®

Live Center Frontplate

ENGINEERING
TOMORROW

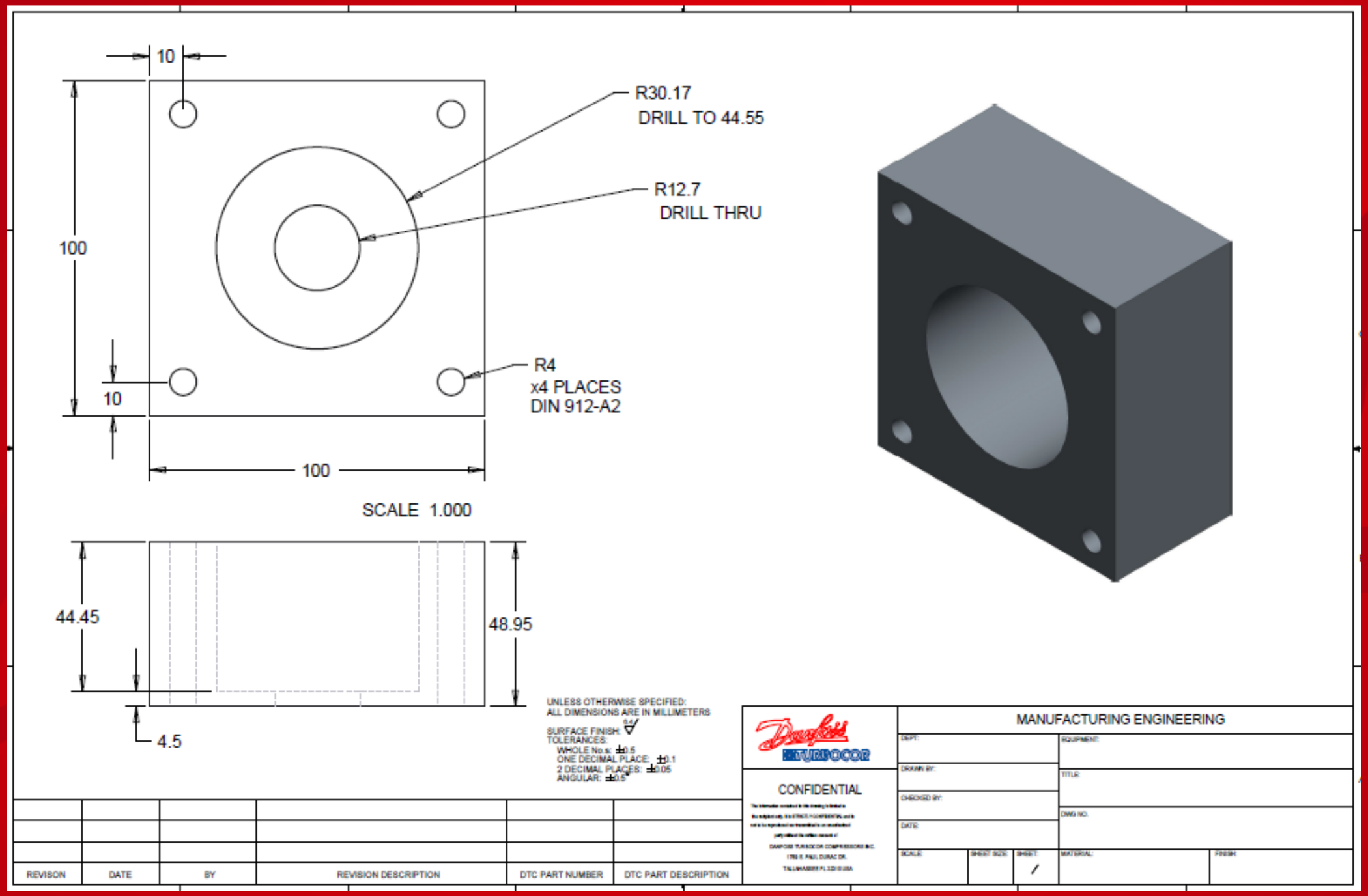

Team #4: VTT Rotor Back EMF Test Fixture **Final Presentation**

Appendix Slide VII

TURBOCOR®

Linear Guide Connector

ENGINEERING
TOMORROW

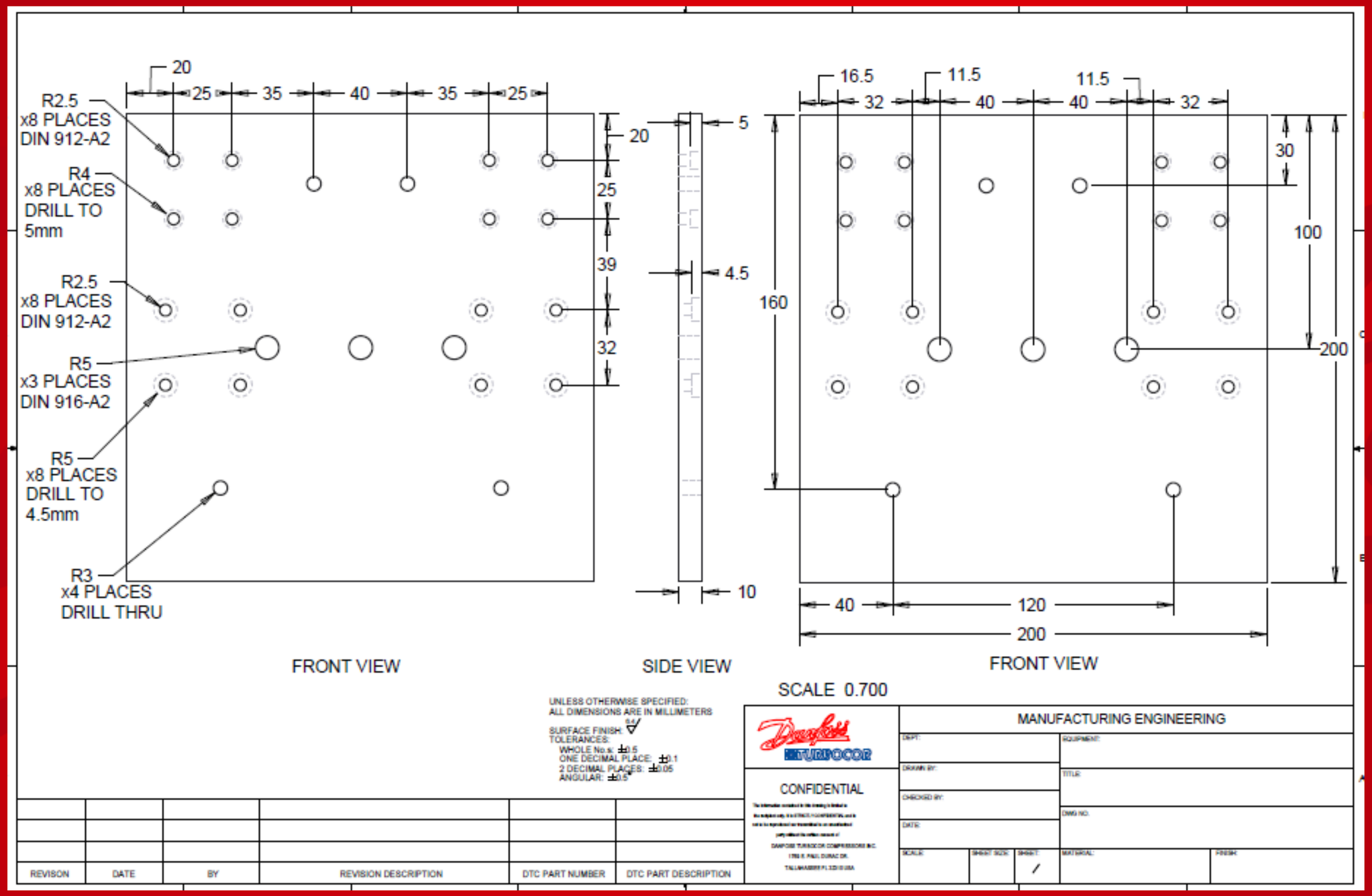

Team #4: VTT Rotor Back EMF Test Fixture **Final Presentation**

Appendix Slide VIII

TURBOCOR®

Live Center Upright Support

ENGINEERING TOMORROW

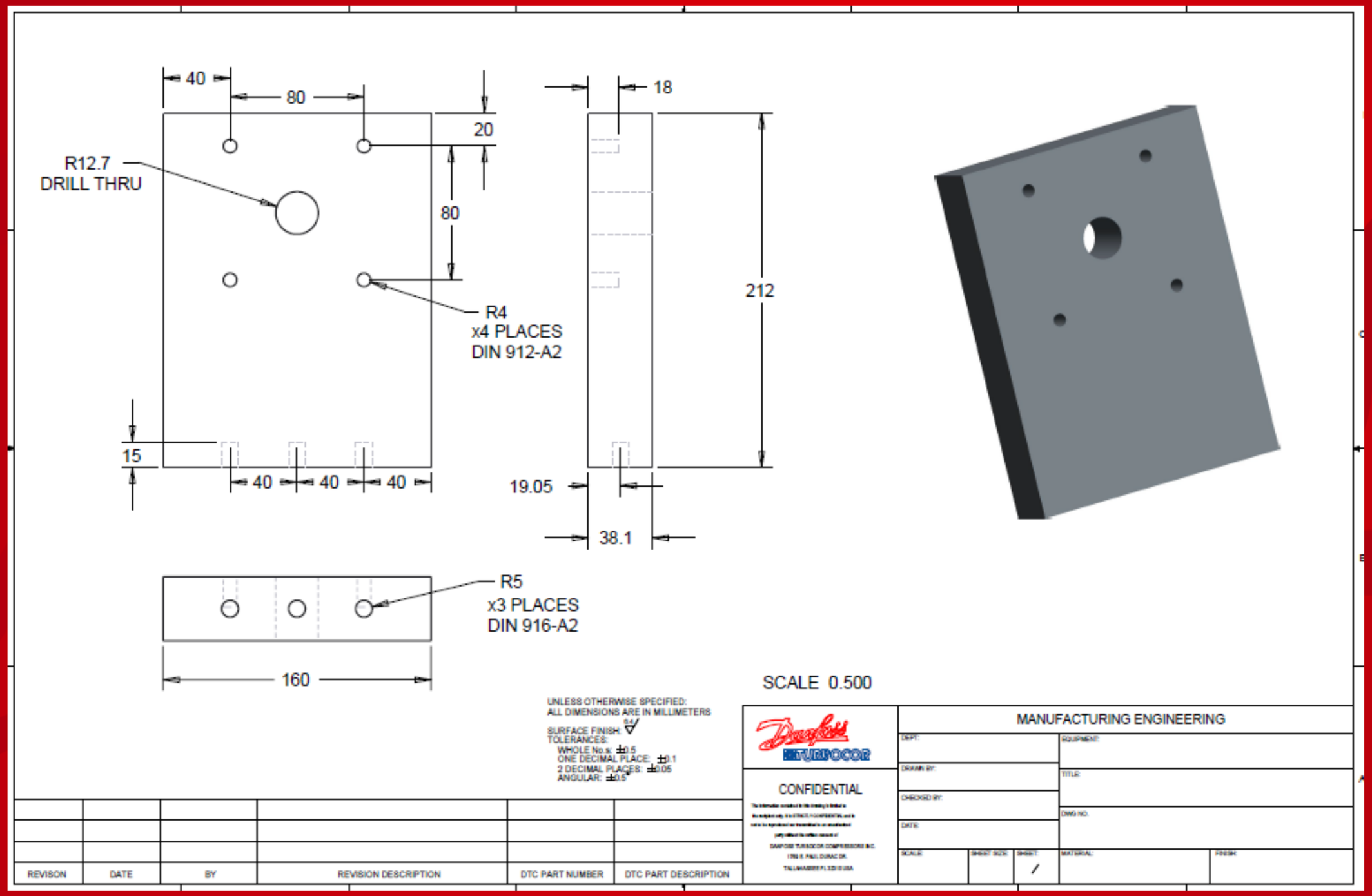

Team #4: VTT Rotor Back EMF Test Fixture **Final Presentation**

Appendix Slide IX

TURBOCOR®

Motor Base Support

ENGINEERING
TOMORROW

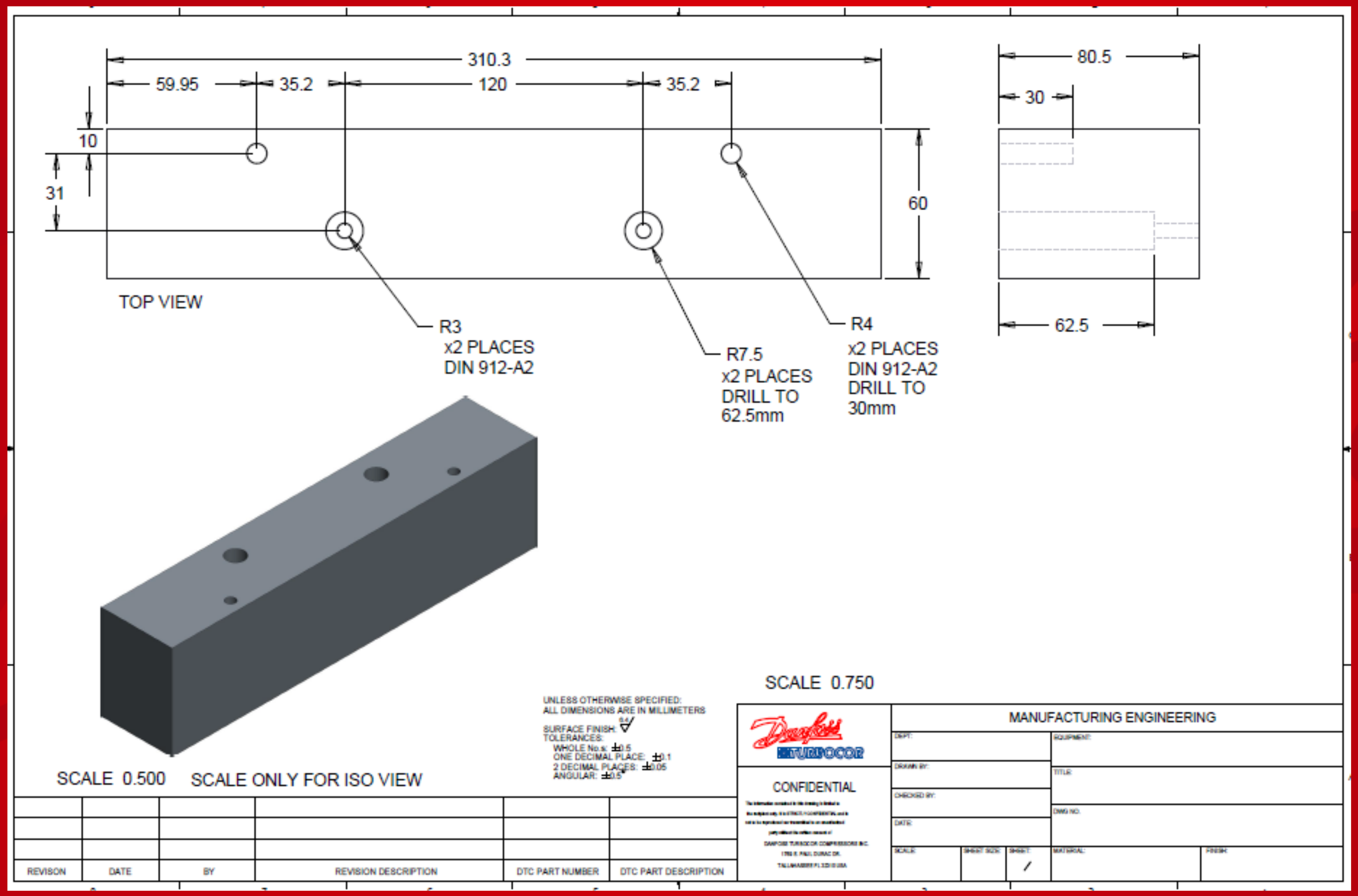

Team #4: VTT Rotor Back EMF Test Fixture **Final Presentation**

Appendix Slide X

TURBOCOR®

FEM: Rotor Connection

ENGINEERING TOMORROW

Stress in MPa
Max Stress: 4.19 MPa
Nylon Tensile Strength: 76 MPa
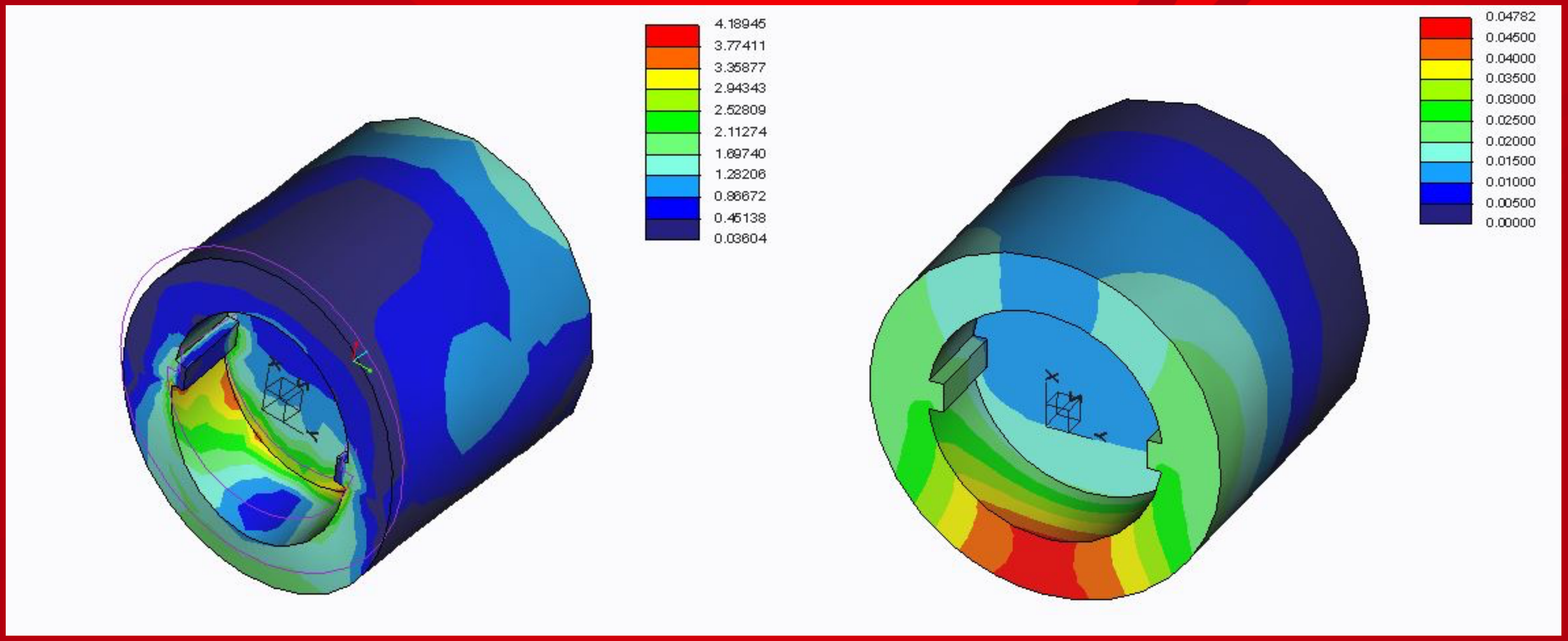
Displacement in mm
Max: 0.048 mm